# Short manual
Window shutters

GRIESSER

## All short manuals for download

External venetian blinds

Awnings

Facade awnings

Articulated cranks

Window shutters

Connection technique

Rolling shutters

Covers

# Window Shutters
## Table of contents


| | |
|---|---|
| **Sliding shutter** | **5** |
| **Pantograph shutter** | **49** |
| **Sliding bi-fold shutter** | **61** |
| **Wing shutter with window frame** | **77** |
| **Wing shutter with installation frame** | **93** |
| **Wing shutter conventional** | **129** |
| **Annex** | **167** |
| **Index** | **171** |


The information and values given refer to our products in their standard version according to the brochure and intended use / application.

# Sliding shutter


| | |
|---|---|
| Limit dimensions | **6** |
| Calculation of finished sash dimensions | **12** |
| Installation situations at top | **14** |
| Installation situations at bottom | **21** |
| Runner rails | **36** |
| Guide rails | **37** |
| Point guides | **38** |
| End stop diagrams | **39** |
| Sash protrusion \| Sash overlap | **40** |
| Frieze | **40** |
| Suspension brackets for runner rail installation | **41** |
| Bottom guide bracket | **43** |
| Lockers | **44** |
| Stoppers | **46** |
| Shell-type handle | **47** |

## Limit dimensions

### Fixed slats

| Illustration | Model | Frame profile | Slat profile | |
|---|---|---|---|---|
| | A [1,2] | 71 x 33 | 50 x 10, with 2 reinforcement bars | |
| | **Width min. (bff)** | **Width* max. (bff)** | **Height min. (hff)** | **Height* max. (hff)** |
| | 500 | 2000 | 400 | 3000 |

| Illustration | Model | Frame profile | Slat profile | |
|---|---|---|---|---|
| | A SLIM [1,2] | 40 x 33 | 50 x 10, with 2 reinforcement bars | |
| | **Width min. (bff)** | **Width* max. (bff)** | **Height min. (hff)** | **Height* max. (hff)** |
| | 500 | 1200 | 400 | 3000 |

| Illustration | Model | Frame profile | Slat profile | |
|---|---|---|---|---|
| | T [1] | 71 x 33 | 50 x 18, with reinforcement bars | |
| | **Width min. (bff)** | **Width* max. (bff)** | **Height min. (hff)** | **Height* max. (hff)** |
| | 500 | 1800 | 400 | 3000 |

| Illustration | Model | Frame profile | Slat profile | |
|---|---|---|---|---|
| | R [1,2] | 71 x 33 | 60 x 6, with 2 reinforcement bars | |
| | **Width min. (bff)** | **Width* max. (bff)** | **Height min. (hff)** | **Height* max. (hff)** |
| | 500 | 1200 | 400 | 3000 |

[1] Execution with fine structure mat is not possible at sash width 800 (except vertical frieze)

[2] Permitted gap between top/bottom slat and frame: 2 mm
Permitted inclination difference: 1 mm

* **bff max.** and **hff max.** are always dependent on each other.
Starting with certain widths/heights, vertical/horizontal friezes become necessary.

**In the event of a facade offset > 500 mm (e.g. for use on balconies and loggias), the system must be structurally inspected and tested in situ!**

Dimensions should always be viewed **from inside to outside**.

## Limit dimensions

### Fixed slats

| Illustration | Model | Frame profile | Slat profile | |
|---|---|---|---|---|
| | H Alu | 55 x 45 | 35 x 15<br>60 x 15 | |
| | **Width min. (bff)** | **Width* max. (bff)** | **Height min. (hff)** | **Height* max. (hff)** |
| | 500 | 2000 | 400 | 3000 |

| Illustration | Model | Frame profile | Slat profile | |
|---|---|---|---|---|
| | H Alu SLIM | 42 x 31 | 35 x 15<br>60 x 15 | |
| | **Width min. (bff)** | **Width* max. (bff)** | **Height min. (hff)** | **Height* max. (hff)** |
| | 500 | 2000 | 400 | 2500 |

| Illustration | Model | Frame profile | Slat profile | |
|---|---|---|---|---|
| | H Wood | 55 x 45 | 60 x 15, Siberian larch, untreated | |
| | **Width min. (bff)** | **Width* max. (bff)** | **Height min. (hff)** | **Height* max. (hff)** |
| | 500 | 2000 | 400 | 3000 |

| Illustration | Model | Frame profile | Slat profile | |
|---|---|---|---|---|
| | H Wood SLIM | 42 x 31 | 60 x 15, Siberian larch, untreated | |
| | **Width min. (bff)** | **Width* max. (bff)** | **Height min. (hff)** | **Height* max. (hff)** |
| | 500 | 2000 | 400 | 2500 |

* **bff max.** and **hff max.** are always dependent on each other.
Starting with certain widths/heights, vertical/horizontal friezes become necessary.

**In the event of a facade offset > 500 mm (e.g. for use on balconies and loggias), the system must be structurally inspected and tested in situ!**

Dimensions should always be viewed **from inside to outside**.

**bff** Finished sash width

**hff** Finished sash height

## Limit dimensions

### Movable slats

| Illustration | Model | Frame profile | Slat profile | |
|---|---|---|---|---|
| | B | 71 x 33 | 50 x 10 | |
| | **Width min. (bff)** | **Width* max. (bff)** | **Height min. (hff)** | **Height* max. (hff)** |
| | 500 | 1500 | 400 | 2500 |

### Clothings

| Illustration | Model | Frame profile | Fabric Soltis | |
|---|---|---|---|---|
| | Soltis | 71 x 33 | 92<br>86 | |
| | **Width min. (bff)** | **Width* max. (bff)** | **Height min. (hff)** | **Height* max. (hff)** |
| | 500 | 1800 | 400 | 3000 |

| Illustration | Model | Frame profile | Fabric Soltis | |
|---|---|---|---|---|
| | Soltis SLIM | 55 x 45 | 92<br>86 | |
| | **Width min. (bff)** | **Width* max. (bff)** | **Height min. (hff)** | **Height* max. (hff)** |
| | 500 | 1800 | 400 | 3000 |

* **bff max.** and **hff max.** are always dependent on each other.
Starting with certain widths/heights, vertical/horizontal friezes become necessary.

**In the event of a facade offset > 500 mm (e.g. for use on balconies and loggias), the system must be structurally inspected and tested in situ!**

Dimensions should always be viewed **from inside to outside**.

**bff** Finished sash width

**hff** Finished sash height

## Limit dimensions

### Closed models

| Illustration | Model | Frame profile | Filling | |
|---|---|---|---|---|
| | S | SYS 70 x 30 | 2 mm aluminum sheet | |
| | **Width min. (bff)** | **Width* max. (bff)** | **Height min. (hff)** | **Height* max. (hff)** |
| | 500 | 1900 | 400 | 3000 |

| Illustration | Model | Frame profile | Filling | |
|---|---|---|---|---|
| | S SLIM | 40 x 31 | 2 mm aluminum sheet | |
| | **Width min. (bff)** | **Width* max. (bff)** | **Height min. (hff)** | **Height* max. (hff)** |
| | 500 | 1400 | 400 | 3000 |

| Illustration | Model | Frame profile | Filling | |
|---|---|---|---|---|
| | SL | SYS 70 x 30 | 2 mm aluminum sheet, perforated<br>Standard perforations:<br>Q 20 x 20, Q 35 x 35, RU 20 and RU 30<br>Distance between hole edges: ≥ 20 | |
| | **Width min. (bff)** | **Width* max. (bff)** | **Height min. (hff)** | **Height* max. (hff)** |
| | 500 | 1900 | 400 | 3000 |

| Illustration | Model | Frame profile | Filling | |
|---|---|---|---|---|
| | SL SLIM | 40 x 31 | 2 mm aluminum sheet, perforated<br>Standard perforations:<br>Q 20 x 20, Q 35 x 35, RU 20 and RU 30<br>Distance between hole edges: ≥ 20 | |
| | **Width min. (bff)** | **Width* max. (bff)** | **Height min. (hff)** | **Height* max. (hff)** |
| | 500 | 1400 | 400 | 3000 |

* **bff max.** and **hff max.** are always dependent on each other.
Starting with certain widths/heights, vertical/horizontal friezes become necessary.

**In the event of a facade offset > 500 mm (e.g. for use on balconies and loggias), the system must be structurally inspected and tested in situ!**

Dimensions should always be viewed **from inside to outside**.

## Limit dimensions

### Closed models

| Illustration | Model | Frame profile | Filling | |
|---|---|---|---|---|
| | Sentum | 55 x 45 | 2 mm aluminum expanded metal<br>Mesh according to choice (optional) | |
| | **Width min. (bff)** | **Width* max. (bff)** | **Height min. (hff)** | **Height* max. (hff)** |
| | 500 | 1800 | 400 | 3000 |

| Illustration | Model | Frame profile | Filling | |
|---|---|---|---|---|
| | Sentum SLIM | 42 x 31 | 2 mm aluminum expanded metal<br>Mesh according to choice (optional) | |
| | **Width min. (bff)** | **Width* max. (bff)** | **Height min. (hff)** | **Height* max. (hff)** |
| | 500 | 1400 | 400 | 2800 |

| Illustration | Model | Frame profile | Filling | |
|---|---|---|---|---|
| | Platina | 71 x 33 | 8 mm Fundermax Uni-Decor plate | |
| | **Width min. (bff)** | **Width* max. (bff)** | **Height min. (hff)** | **Height* max. (hff)** |
| | 500 | 1800 | 400 | 2800 |

| Illustration | Model | Frame profile | Filling | |
|---|---|---|---|---|
| | Platina SLIM | 42 x 31 | 8 mm Fundermax Uni-Decor plate | |
| | **Width min. (bff)** | **Width* max. (bff)** | **Height min. (hff)** | **Height* max. (hff)** |
| | 500 | 1800 | 400 | 2800 |

* **bff max.** and **hff max.** are always dependent on each other.
Starting with certain widths/heights, vertical/horizontal friezes become necessary.

**In the event of a facade offset > 500 mm (e.g. for use on balconies and loggias), the system must be structurally inspected and tested in situ!**

Dimensions should always be viewed **from inside to outside**.

**bff** Finished sash width

**hff** Finished sash height

## Calculation of finished sash dimensions

(Identical sash widths)

### Finished sash height (hff)

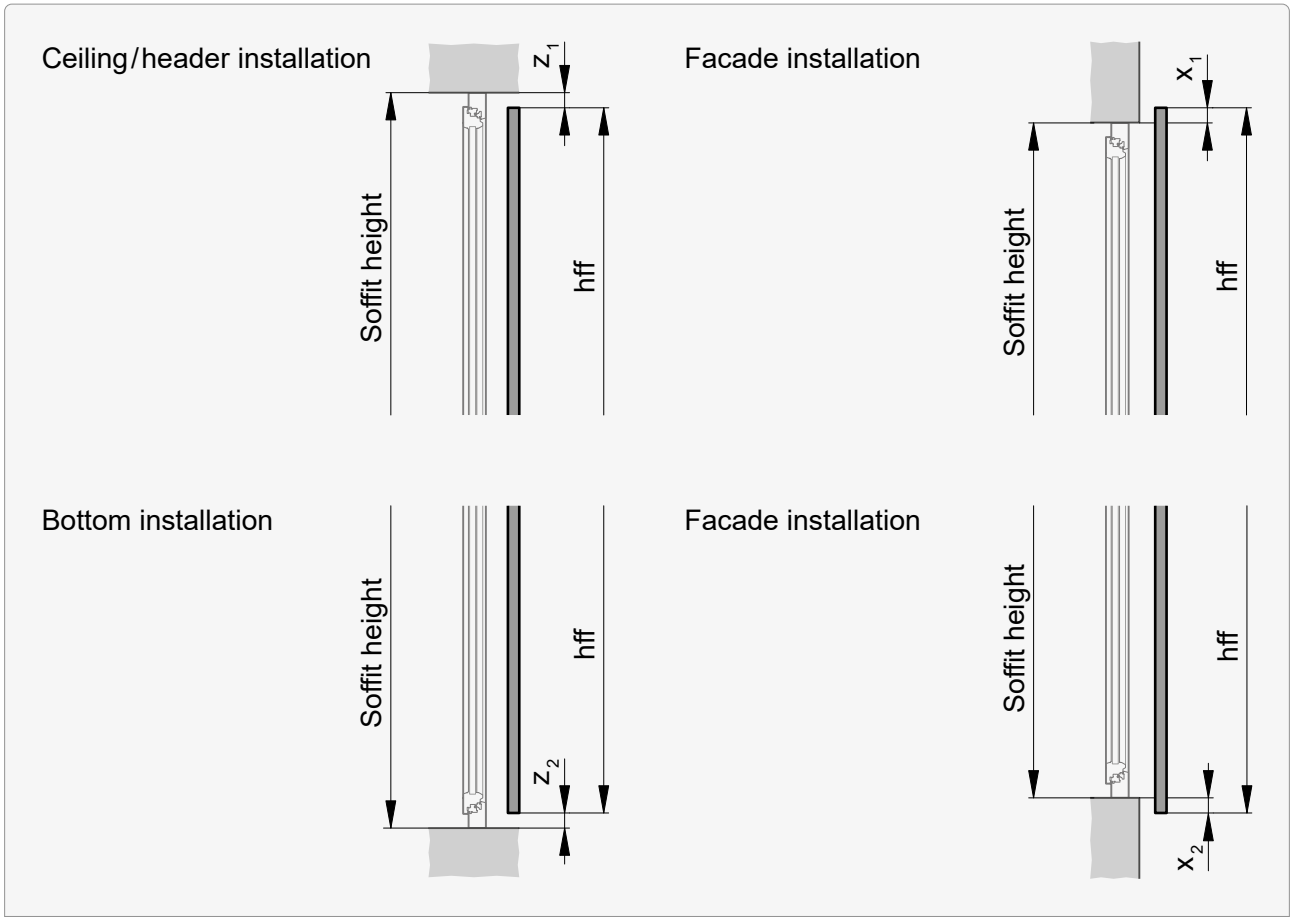


**hff** = ( Soffit height + Σx – Σz )

**hff** Finished sash height

**x** Sash protrusion

**z** Sash shortfall

## Calculation of finished sash dimensions

(Identical sash widths)

### Finished sash width (bff)

Scheme 1L | 1R

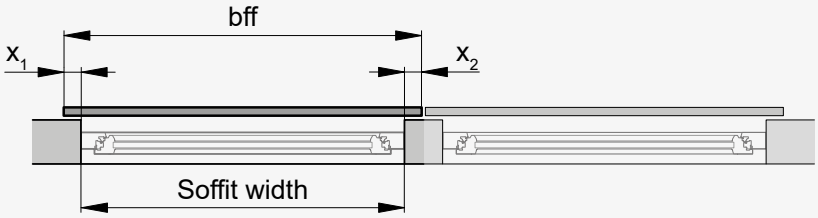


Scheme 2L | 2R

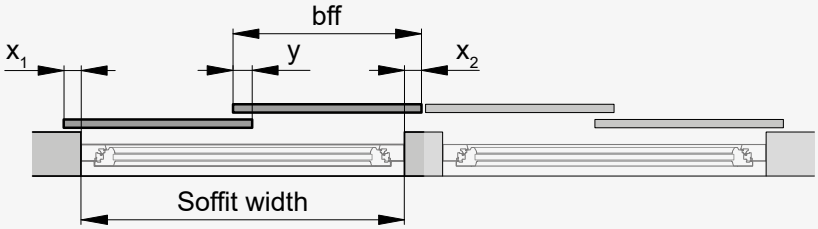


Scheme 3L | 3R

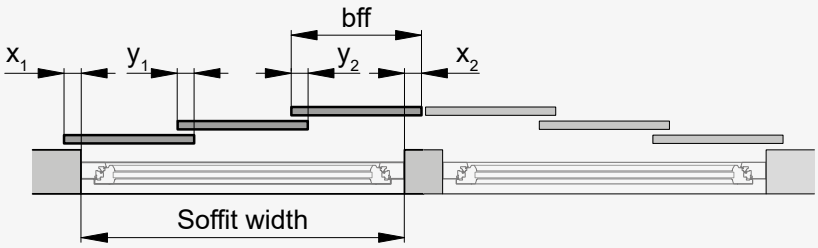


$$\textbf{bff} = \frac{(\text{Soffit width} + \Sigma x + \Sigma y)}{\text{Number of sashes}}$$

Scheme 2

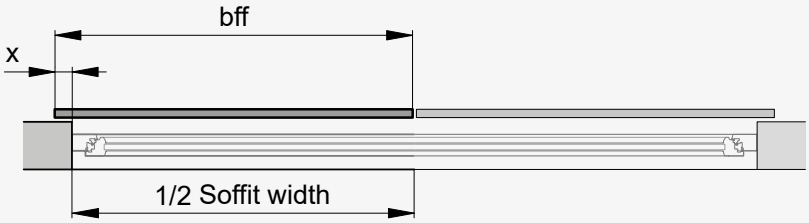


Scheme 4

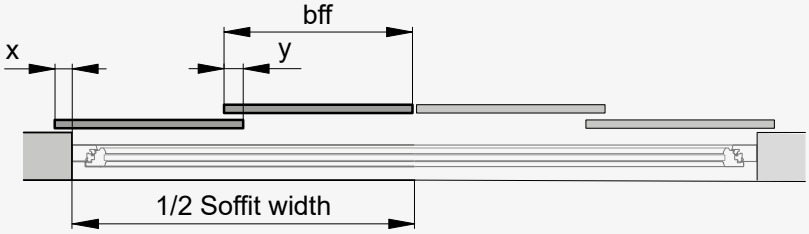


$$\textbf{bff} = \frac{(\tfrac{1}{2}\,\text{Soffit width} + x + y)}{\text{Number of sashes}}$$

**bff** Finished sash width

**x** Sash protrusion

**y** Sash overlap

## Installation situations at top

### Vertical sections: Header/Ceiling installation (DM)

DM

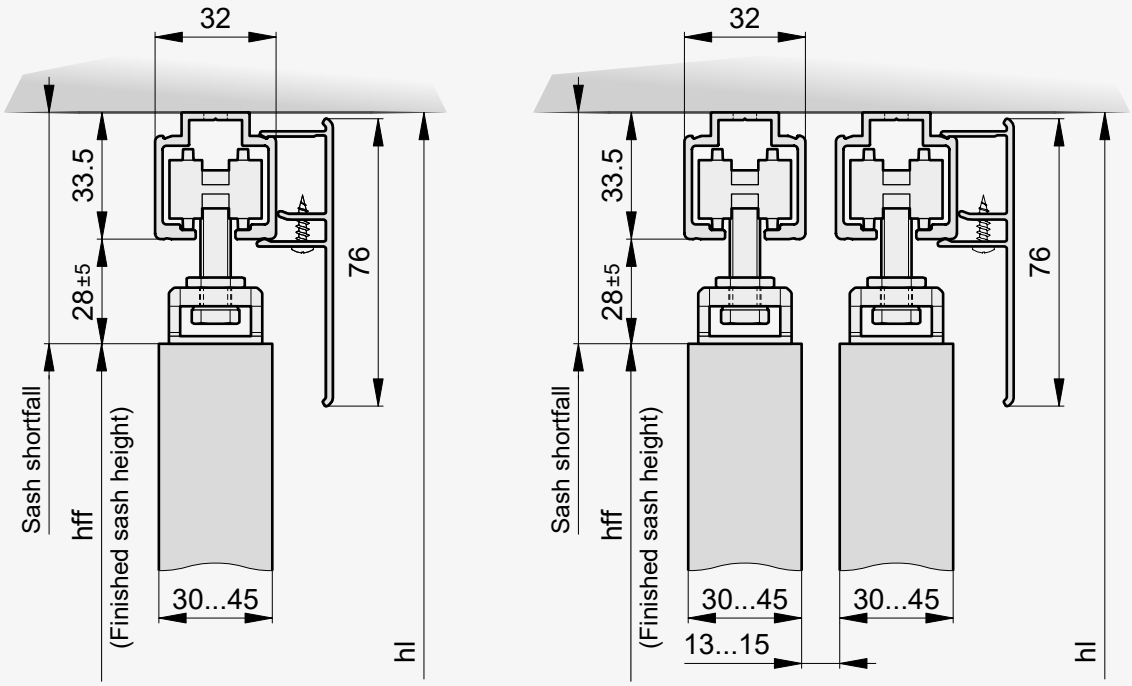





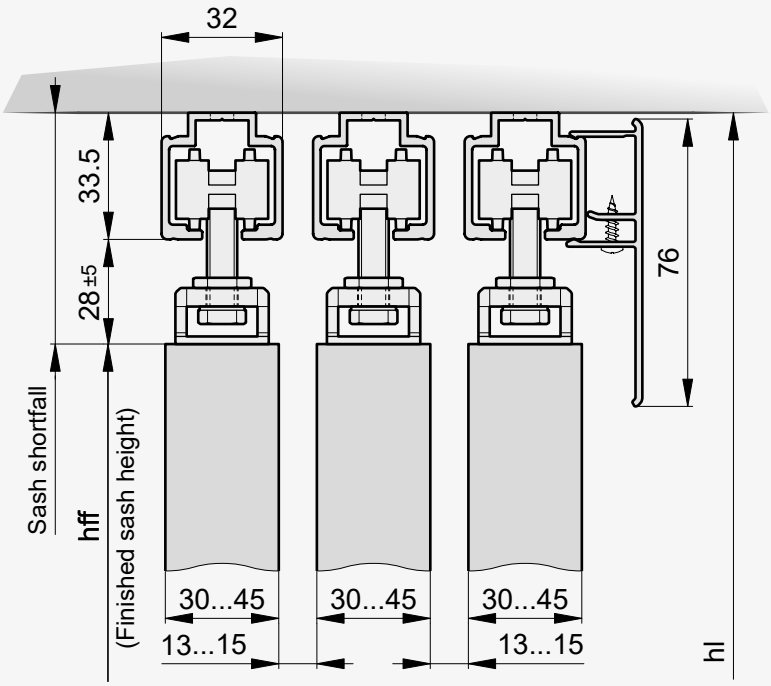

## Installation situations at top

**Vertical section facade: Bracket installation (WM) | Bracket: 50 x 70**

WM

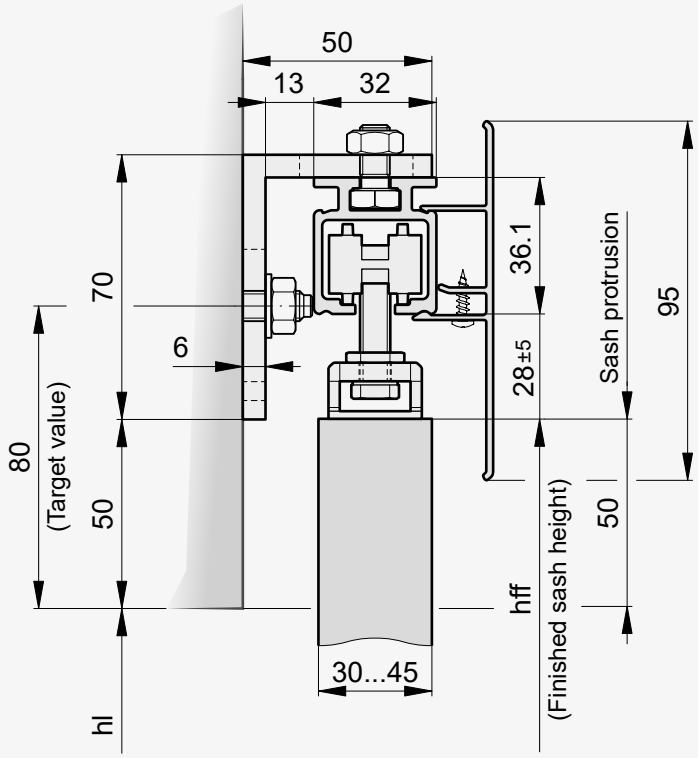

## Installation situations at top

**Vertical sections facade: Bracket installation (WM) | Bracket: 100 x 70**

WM

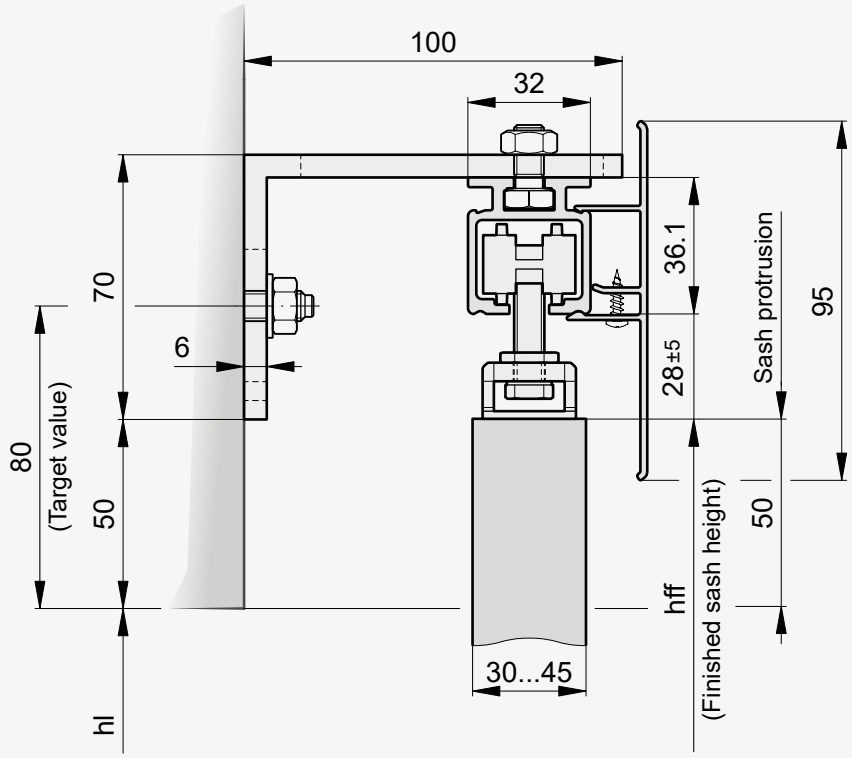


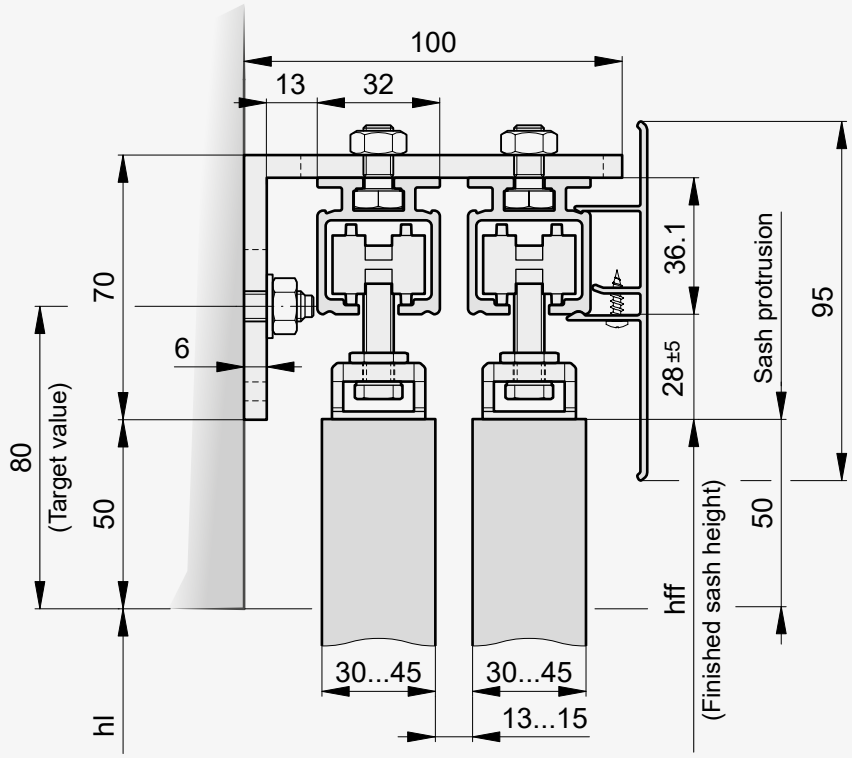


**Frame 45 mm** must be verified.

## Installation situations at top

**Vertical sections facade: Bracket installation (WM) | Bracket: 140 x 100**

WM

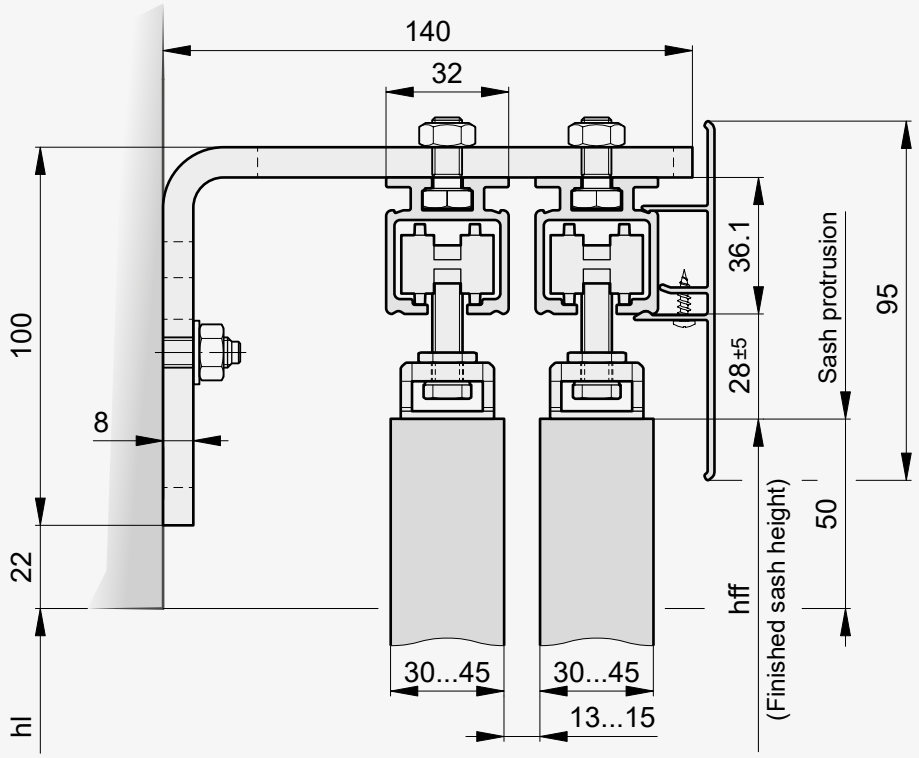


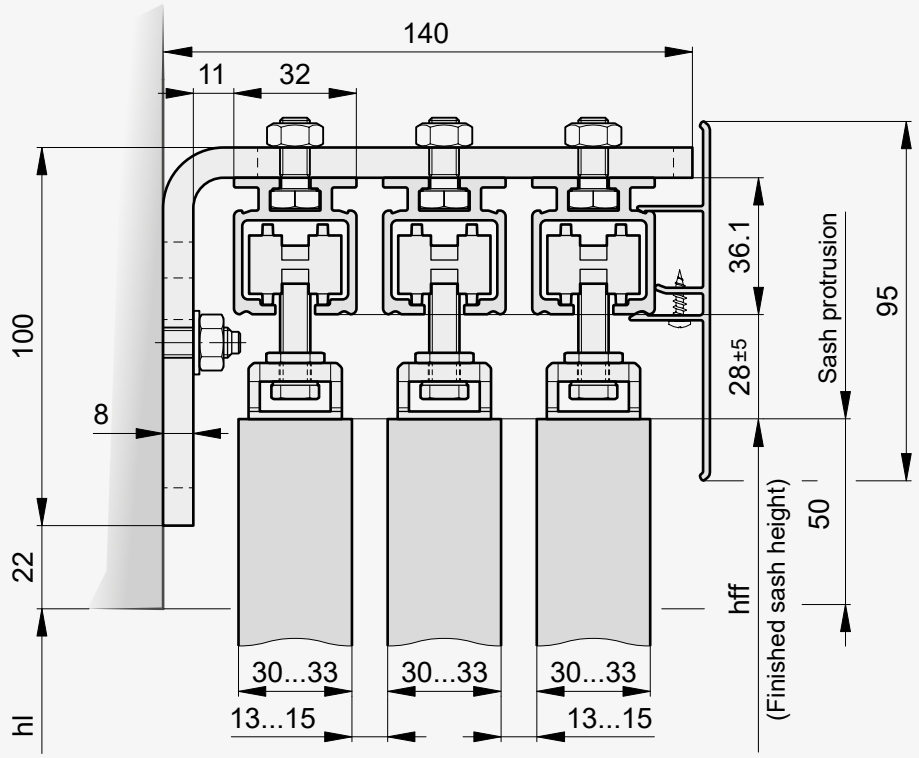


**Frame 45 mm** not possible.

## Installation situations at top

**Vertical section facade: Beam installation (TM) | Carrier System: Single**

TM

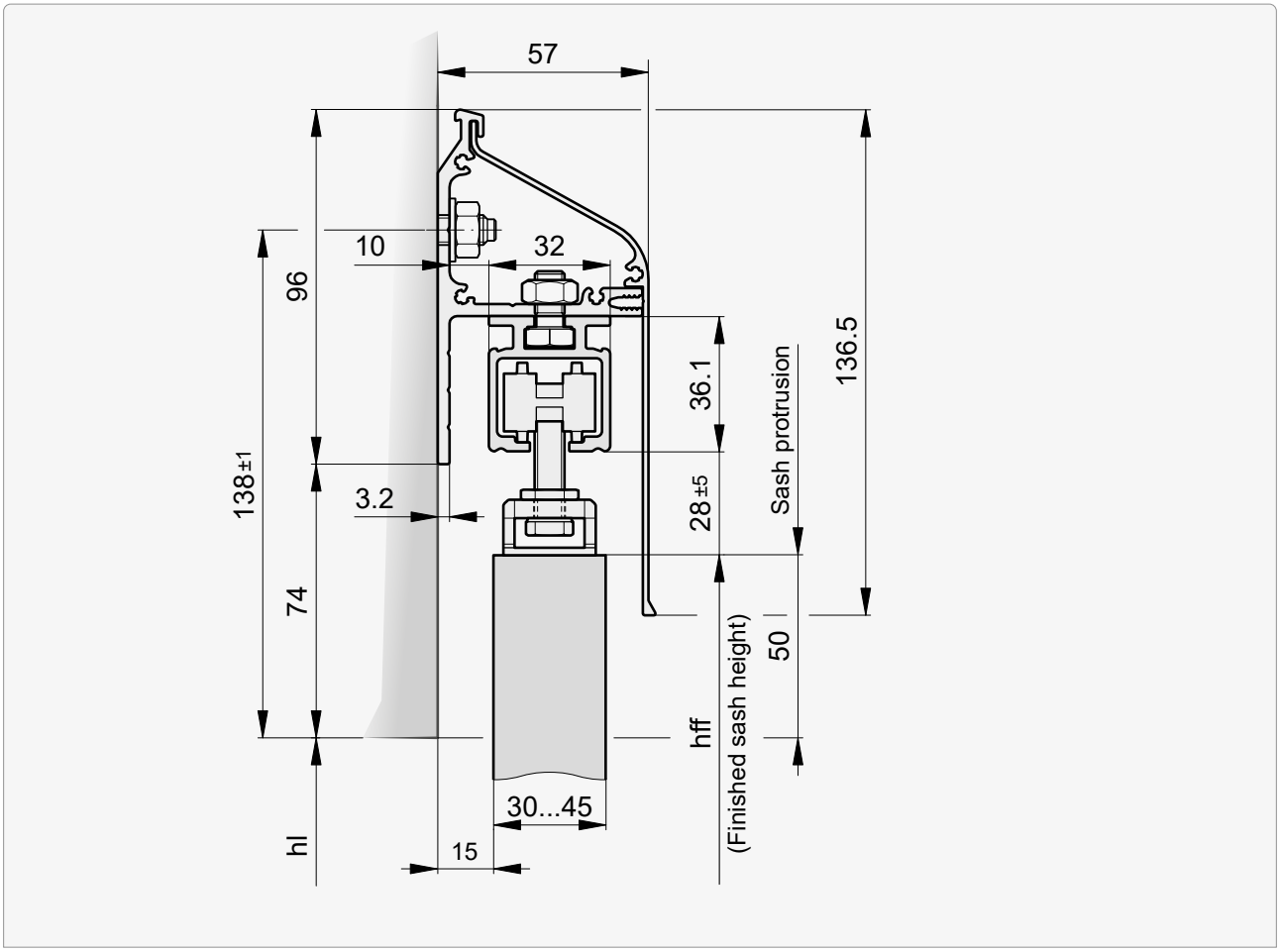


**Frame 45 mm** must be verified.

## Installation situations at top

**Vertical sections facade: Beam installation (TM) | Carrier System: Double**

TM

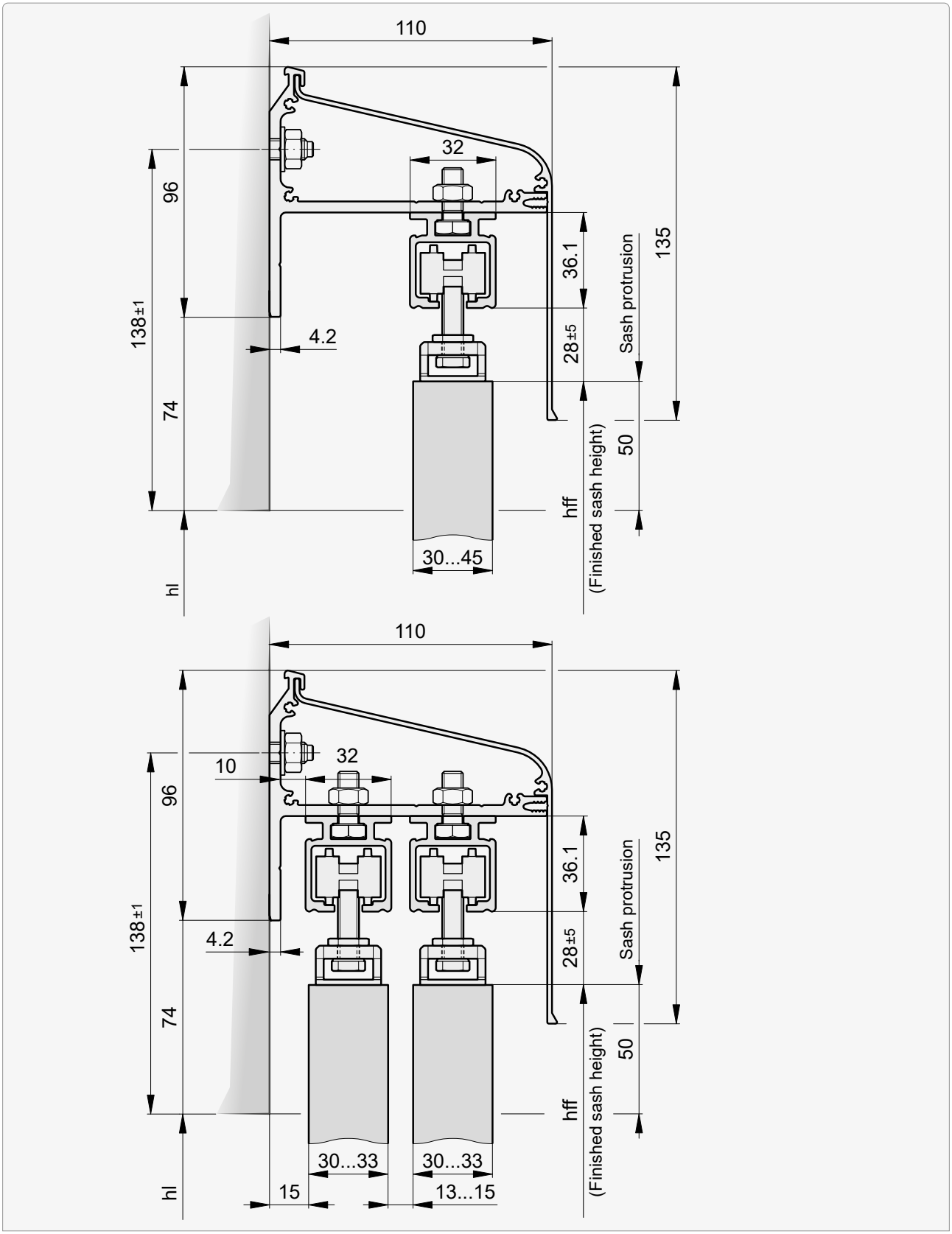


2-track version: **Frame 45 mm** not possible.

## Installation situations at top

**Vertical sections facade: Beam installation (TM) | Carrier System: Triple**

TM

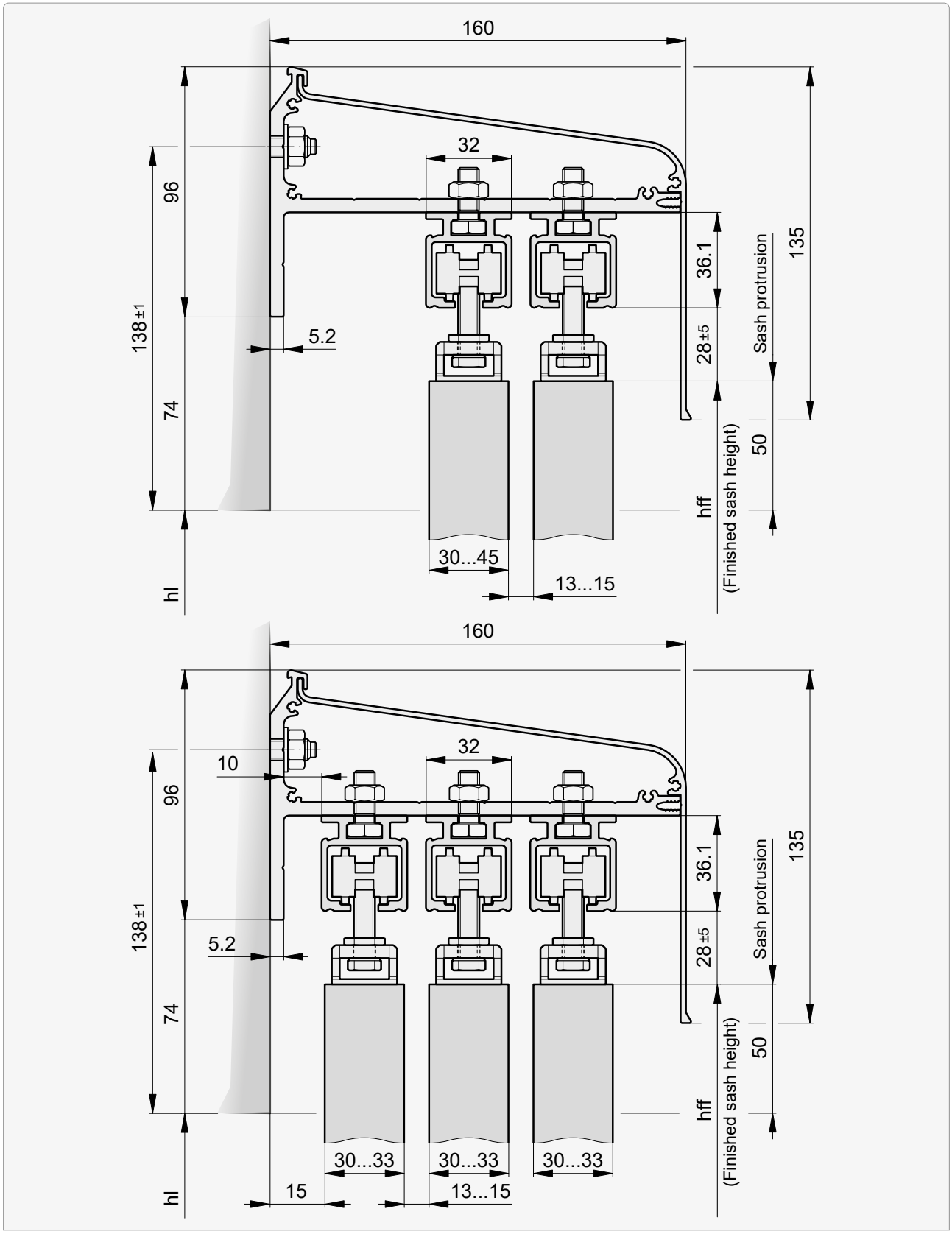


3-track version: **Frame 45 mm** not possible.

## Installation situations at bottom

### Vertical sections bottom mounting: Situation 1

Situation 1

**Manually**

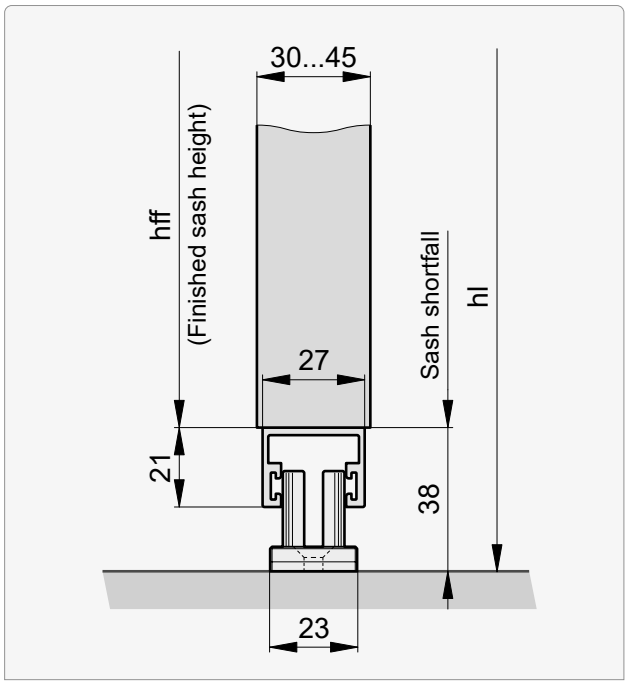


**Motor | Manually**

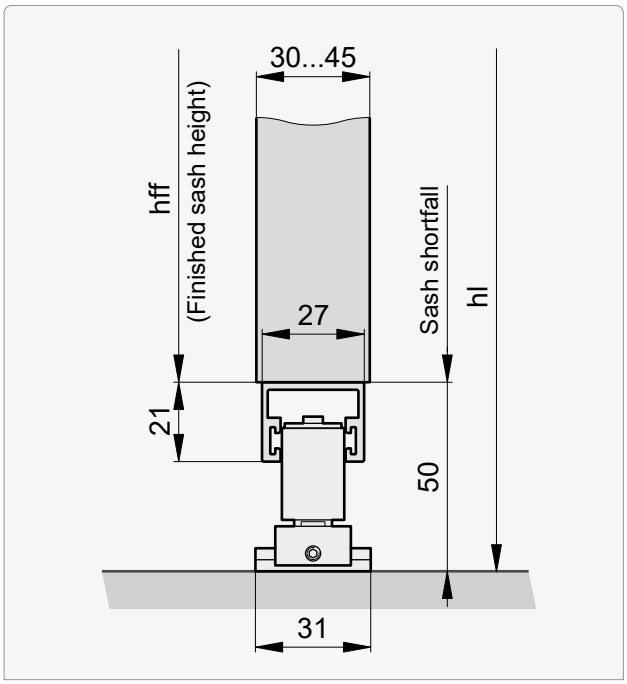


Sash width max.: 1000

**In the case of correspondingly large sashes, a double bottom guide fitting must be fitted in the parking position! This is supplied automatically.**

| Model | Frame profile | Sash height | | | | | | | | | | | |
|---|---|---|---|---|---|---|---|---|---|---|---|---|---|
| | Sash width | 450 | 500 | 550 | 600 | 650 | 700 | 750 | 800 | 850 | 900 | 950 | 1000 |
| A \| T<br>Soltis<br>Platina | 71 x 33 | | | | | | | | | | 2800 | 2700 | 2600 |
| A \| R \| T | SYS 70 x 30 | | | | | | | | | 2900 | 2700 | 2500 | 2300 |
| S \| SL | SYS 70 x 30 | | | | | | | | | | 2800 | 2700 | 2600 |
| Sentum<br>H Alu<br>H Wood<br>Soltis SLIM | 55 x 45 | | | | | | | | | | 2800 | 2700 | 2500 |
| A SLIM | 40 x 33 | | | | | | | | | | 2800 | 2700 | 2600 |
| S SLIM<br>SL SLIM | 40 x 31 | | | | | | | | | 2900 | 2700 | 2500 | 2300 |
| H Alu SLIM<br>H Wood SLIM | 42 x 31 | | | 2500 | 2400 | 2200 | 2000 | 1800 | 800 | 800 | 800 | 800 | 800 |
| Sentum SLIM | 42 x 31 | 2800 | 2600 | 2500 | 2400 | 2200 | 2000 | 1800 | 800 | 800 | 800 | 800 | 800 |
| Platina SLIM | 42 x 31 | | | 2800 | 2700 | 2600 | 2400 | 2200 | 2000 | 1800 | 800 | 800 | 800 |

## Installation situations at bottom

**Vertical sections bottom mounting: Situation 2 | Guide rail: Type L**

Situation 2

**Manually**

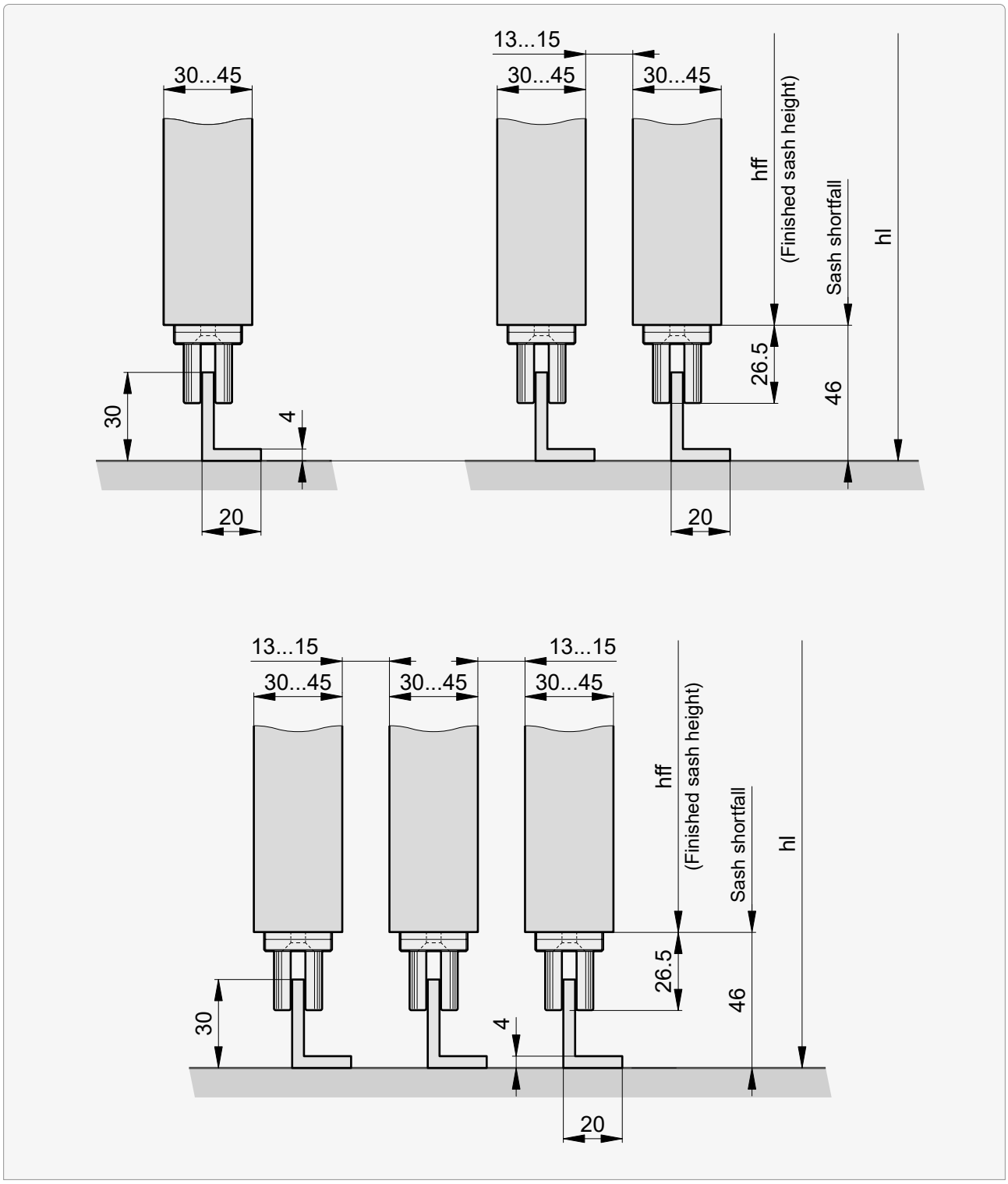

## Installation situations at bottom

**Vertical sections bottom mounting: Situation 2 | Guide rail: Type L**

Situation 2

Motor | Manually

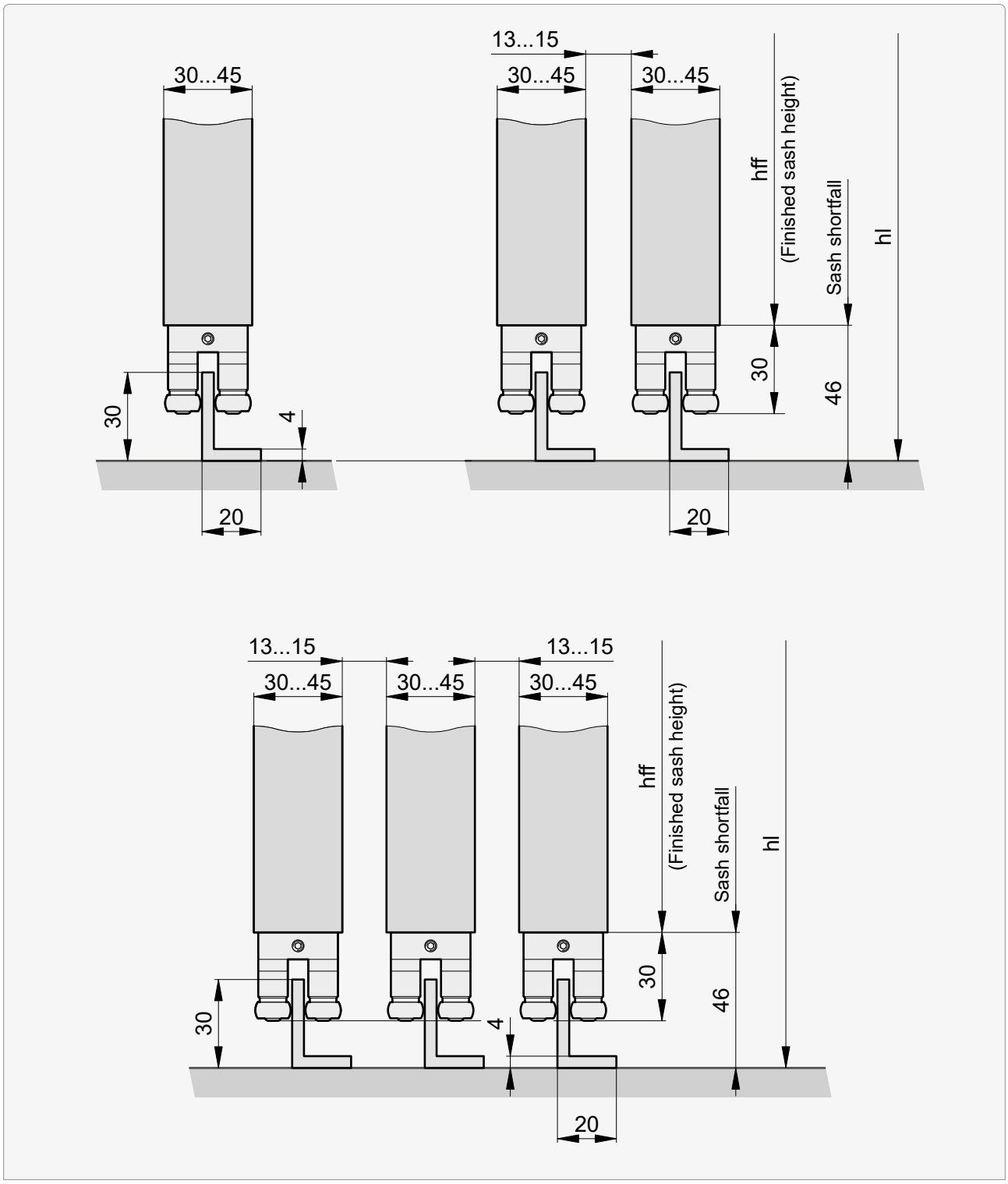

## Installation situations at bottom

**Vertical sections bottom mounting: Situation 2 | Guide rail: Type G**

Situation 2

**Manually**

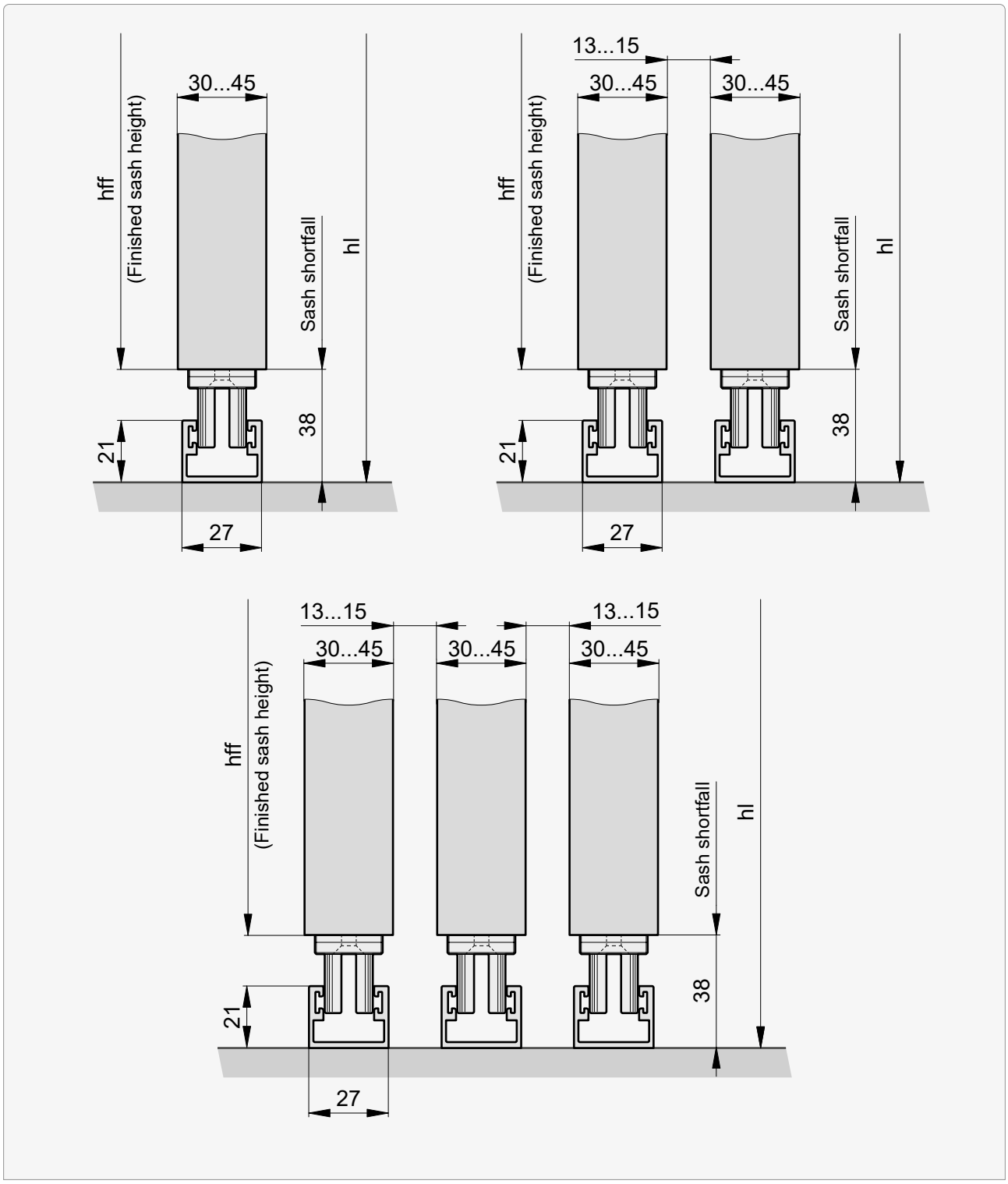

## Installation situations at bottom

**Vertical sections bottom mounting: Situation 2 | Guide rail: Type G**

Situation 2

Motor | Manually

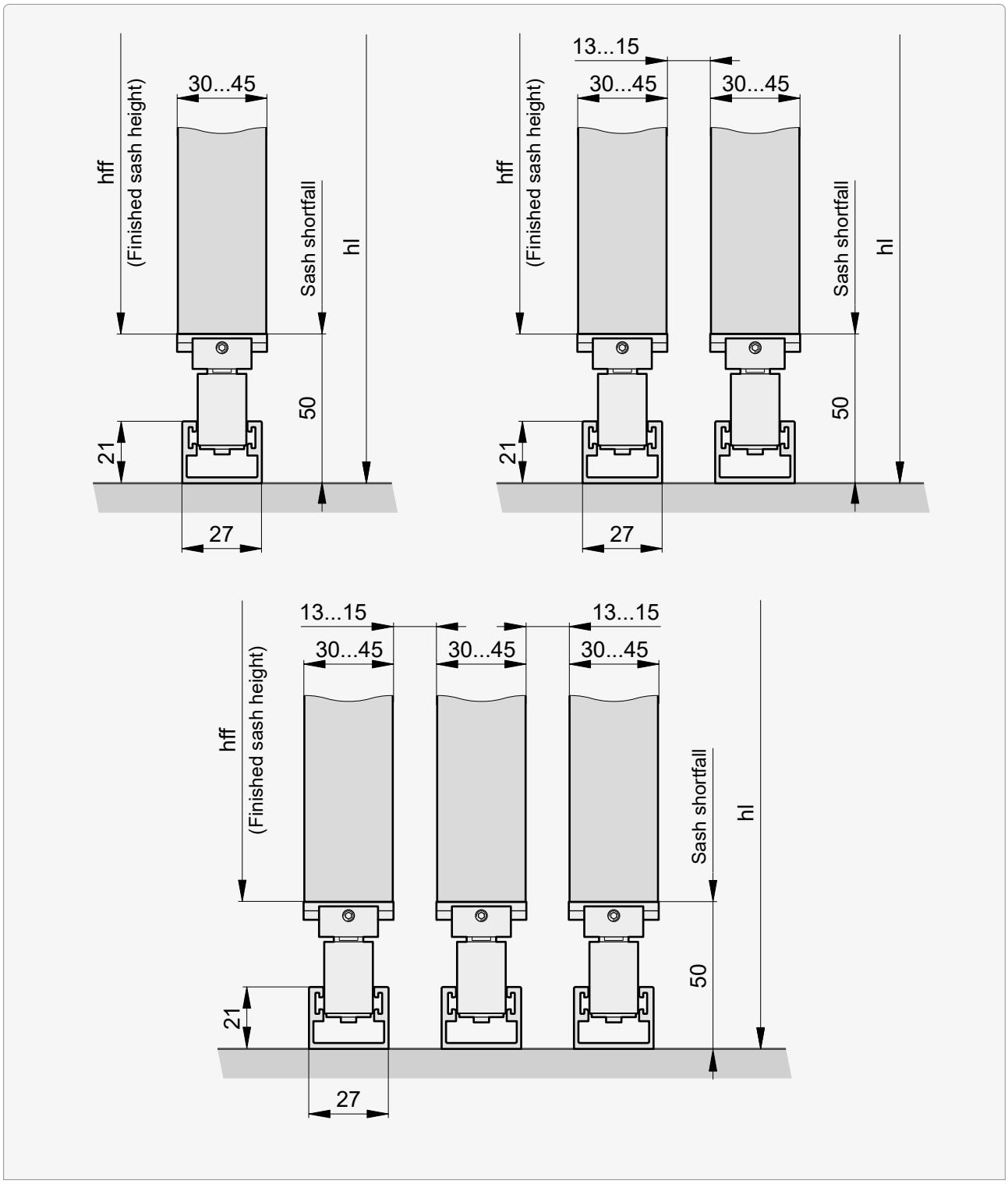

## Installation situations at bottom

### Vertical sections facade: Situation 3

Situation 3

**Manually**

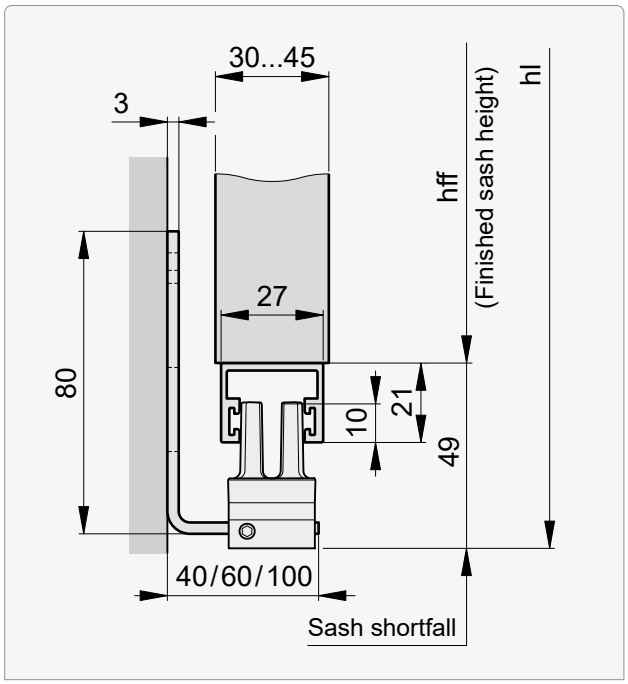


**Motor | Manually**

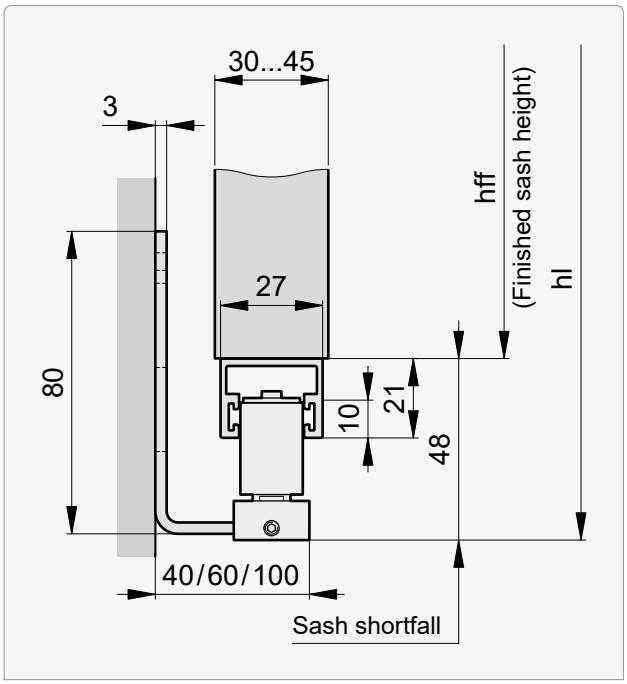


Sash width max.: 1000

**In the case of correspondingly large sashes, a double bottom guide fitting must be fitted in the parking position! This is supplied automatically.**

| Model | Frame profile | Sash height | | | | | | | | | | | |
|---|---|---|---|---|---|---|---|---|---|---|---|---|---|
| | Sash width | 450 | 500 | 550 | 600 | 650 | 700 | 750 | 800 | 850 | 900 | 950 | 1000 |
| A \| T<br>Soltis<br>Platina | 71 x 33 | | | | | | | | | | 2800 | 2700 | 2600 |
| A \| R \| T | SYS 70 x 30 | | | | | | | | | 2900 | 2700 | 2500 | 2300 |
| S \| SL | SYS 70 x 30 | | | | | | | | | | 2800 | 2700 | 2600 |
| Sentum<br>H Alu<br>H Wood<br>Soltis SLIM | 55 x 45 | | | | | | | | | | 2800 | 2700 | 2500 |
| A SLIM | 40 x 33 | | | | | | | | | | 2800 | 2700 | 2600 |
| S SLIM<br>SL SLIM | 40 x 31 | | | | | | | | | 2900 | 2700 | 2500 | 2300 |
| H Alu SLIM<br>H Wood SLIM | 42 x 31 | | | 2500 | 2400 | 2200 | 2000 | 1800 | 800 | 800 | 800 | 800 | 800 |
| Sentum SLIM | 42 x 31 | 2800 | 2600 | 2500 | 2400 | 2200 | 2000 | 1800 | 800 | 800 | 800 | 800 | 800 |
| Platina SLIM | 42 x 31 | | | 2800 | 2700 | 2600 | 2400 | 2200 | 2000 | 1800 | 800 | 800 | 800 |

## Installation situations at bottom

**Vertical sections facade: Situation 4 | Guide rail: Type L**

Situation 4

**Manually**

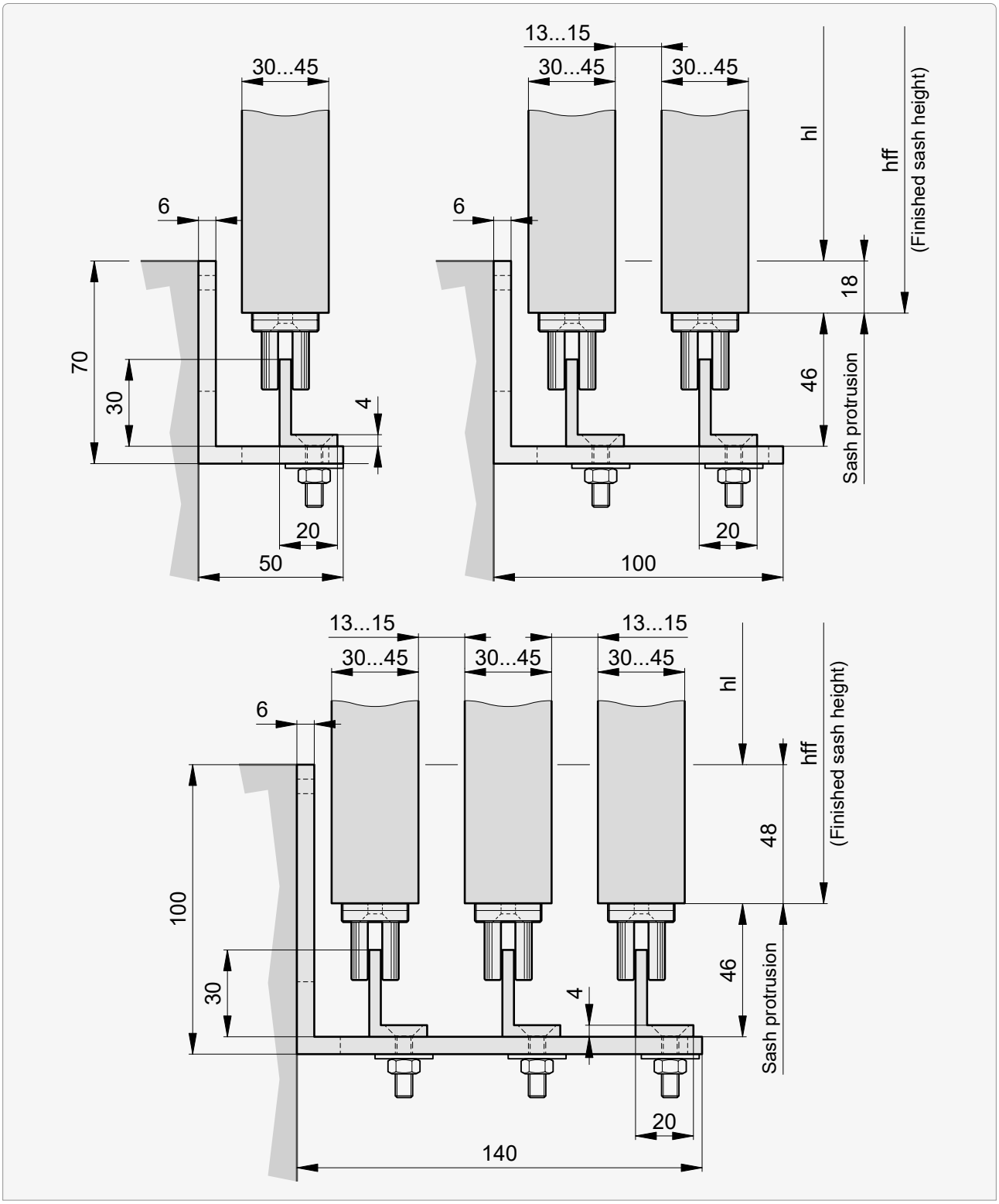


2-track version: **Frame 45 mm** must be verified.
3-track version: **Frame 45 mm** not possible.

## Installation situations at bottom

**Vertical sections facade: Situation 4 | Guide rail: Type L**

Situation 4

**Motor | Manually**

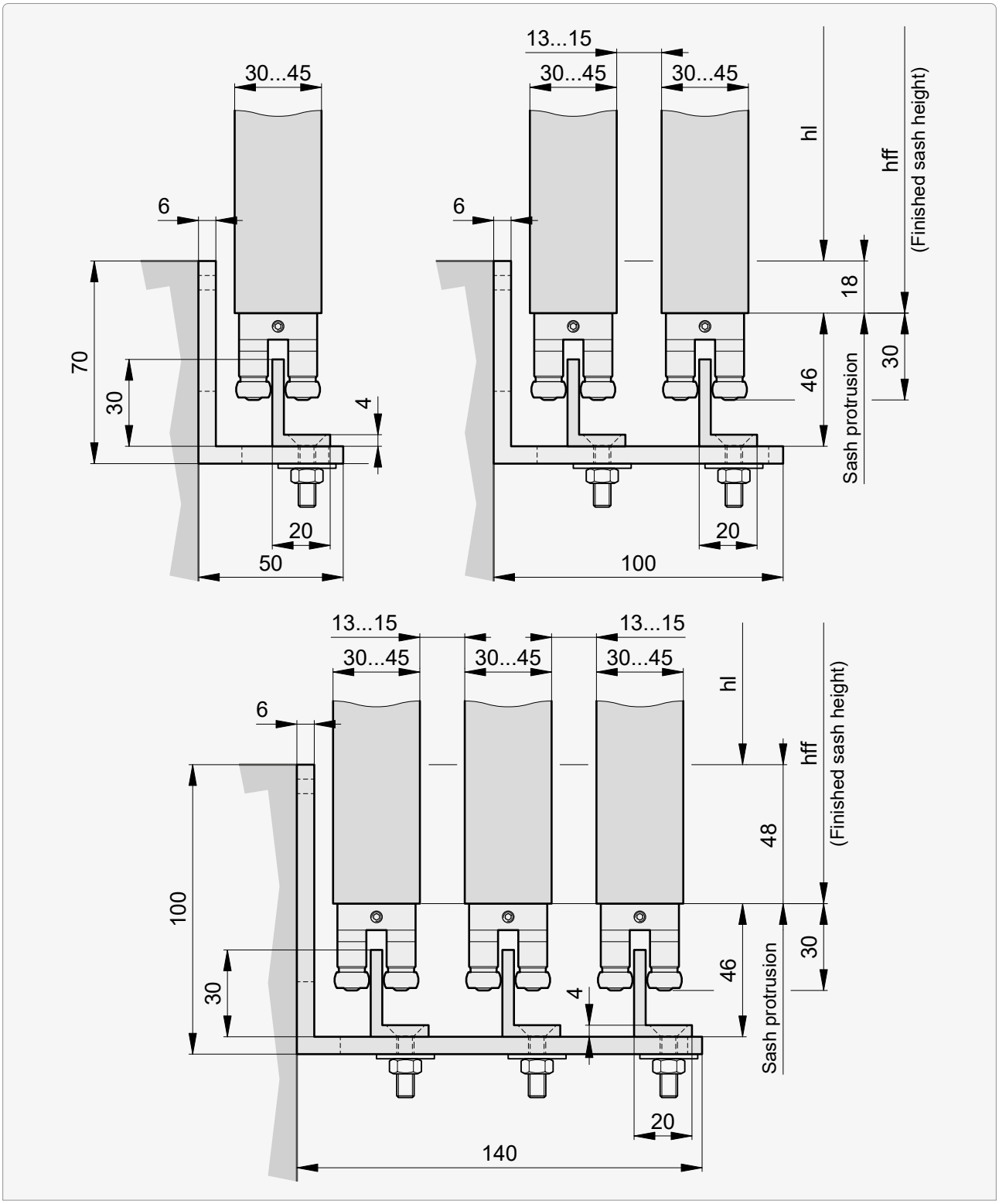

## Installation situations at bottom

**Vertical sections facade: Situation 4 | Guide rail: Type G**

Situation 4

**Manually**

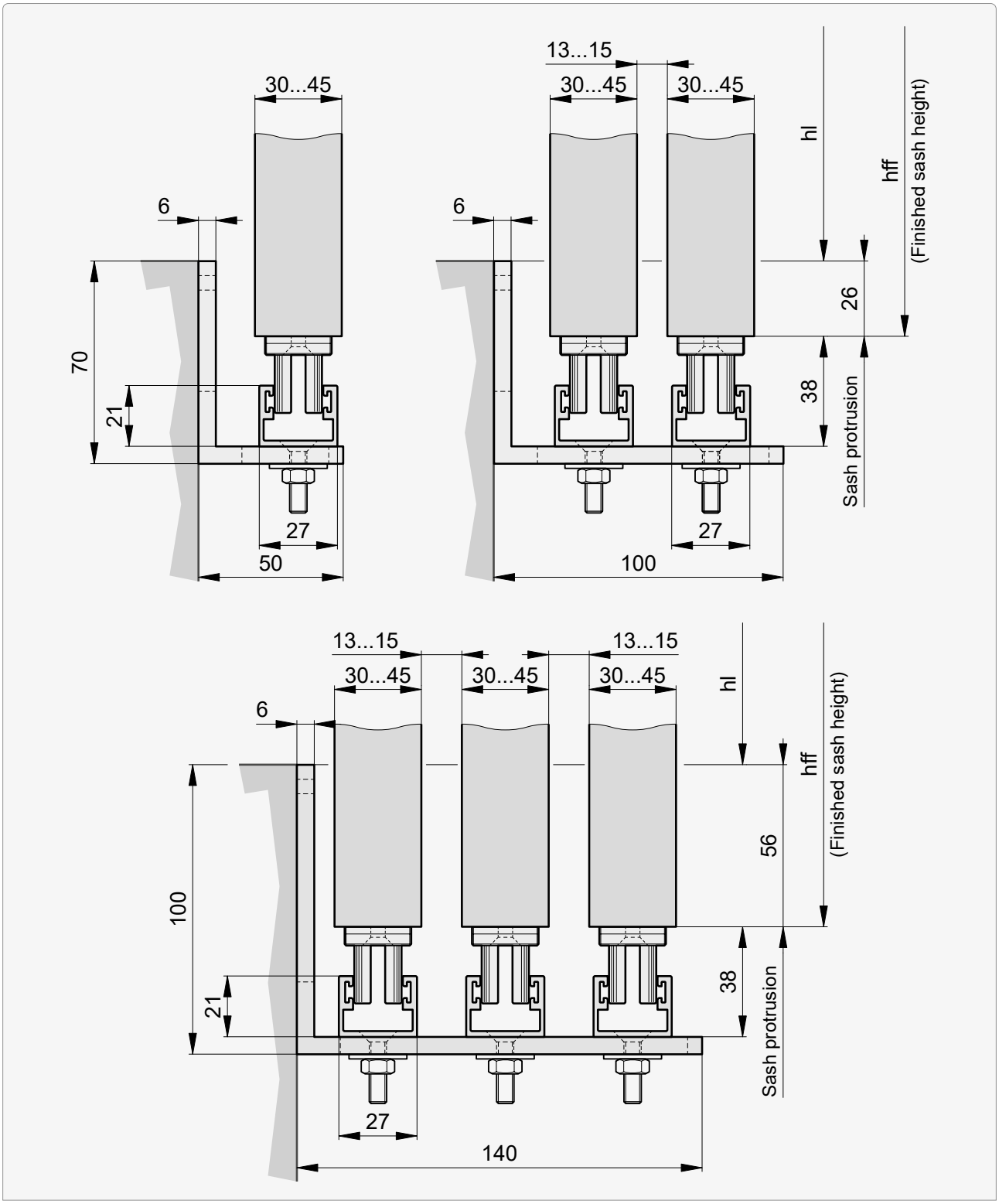


2-track version: **Frame 45 mm** must be verified.
3-track version: **Frame 45 mm** not possible.

## Installation situations at bottom

**Vertical sections facade: Situation 4 | Guide rail: Type G**

**Situation 4**

**Motor | Manually**

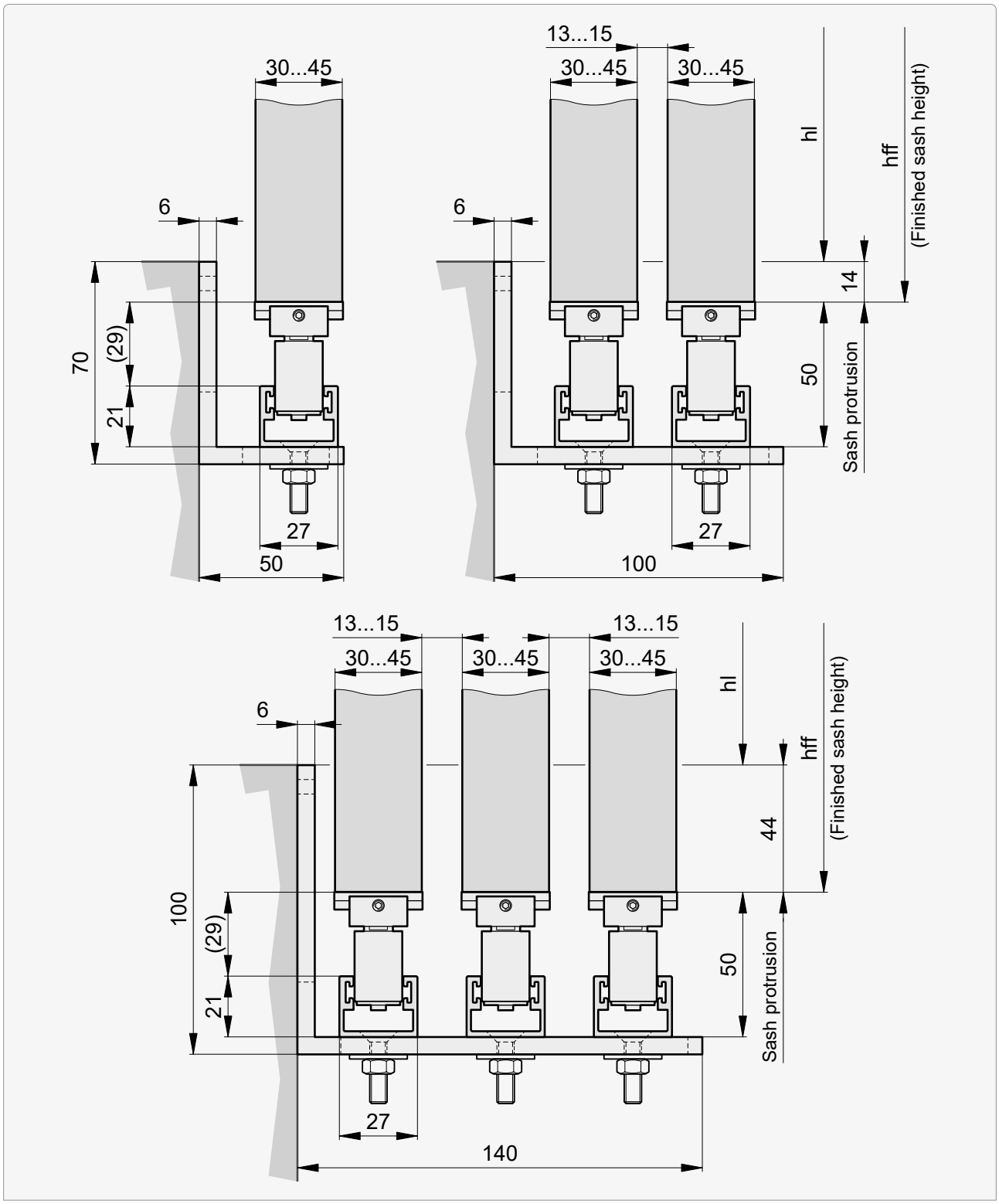


2-track version: **Frame 45 mm** must be verified.
3-track version: **Frame 45 mm** not possible.

## Installation situations at bottom

**Vertical sections facade: Situation 5 | Guide rail: Type G**

Situation 5

**Manually**

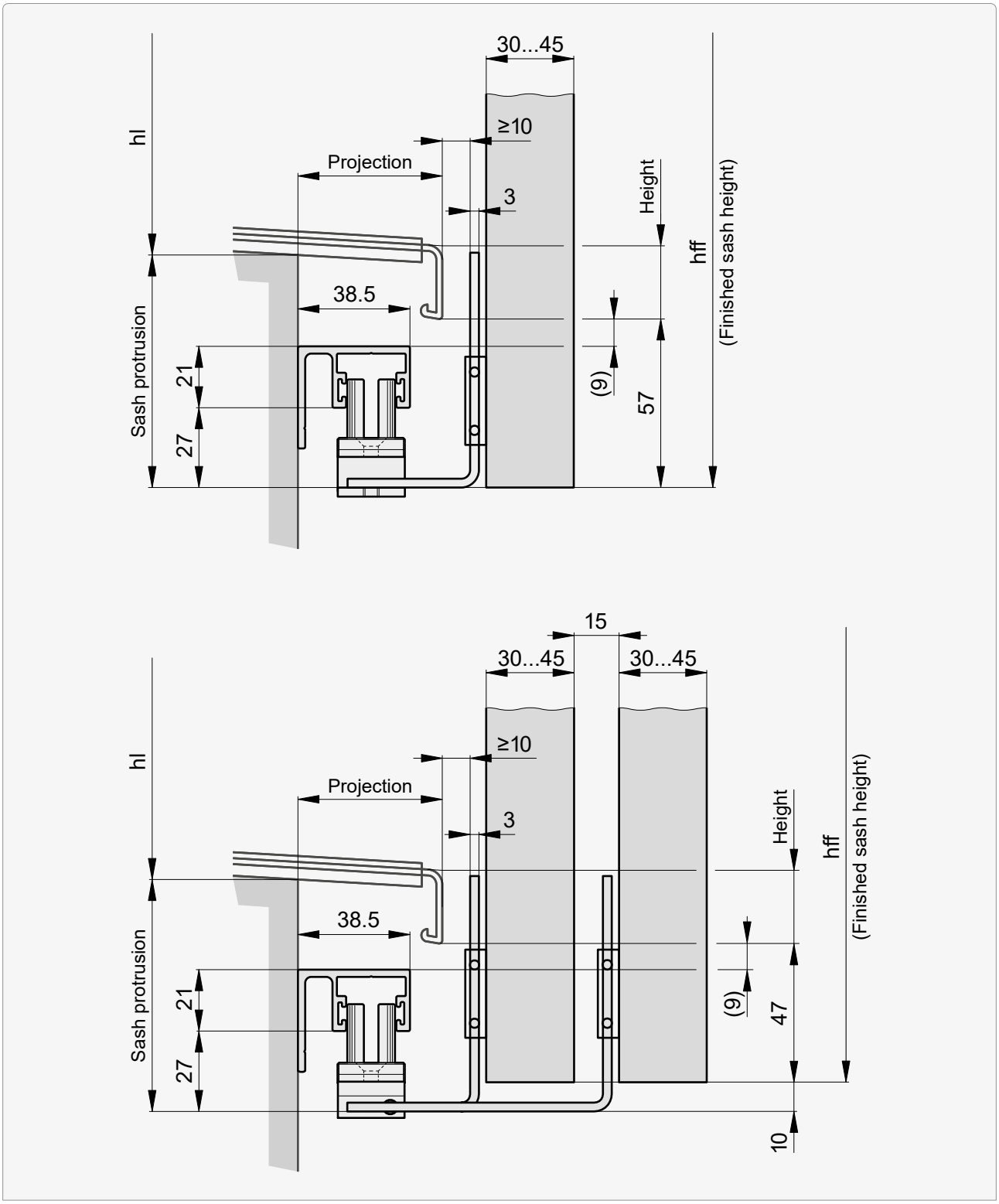

## Installation situations at bottom

**Vertical sections facade: Situation 5 | Guide rail: Type G**

**Situation 5**

**Motor | Manually**

## Installation situations at bottom

**Vertical sections facade: Situation 5 | Guide rail: Type Z**

Situation 5

**Manually**

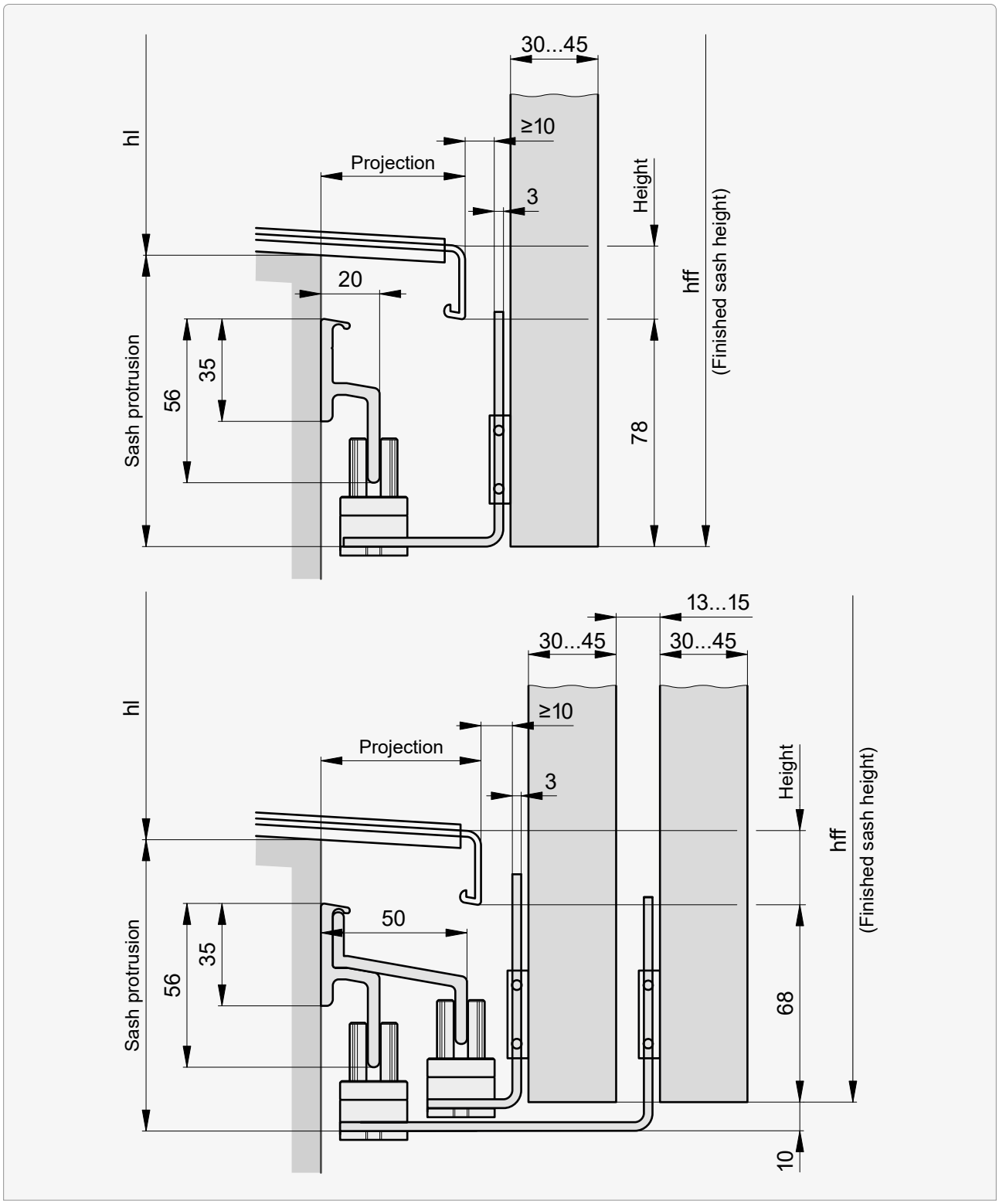


Also possible as 3-track version.

## Installation situations at bottom

**Vertical sections facade: Situation 5 | Guide rail: Type Z**

**Situation 5**

**Motor | Manually**

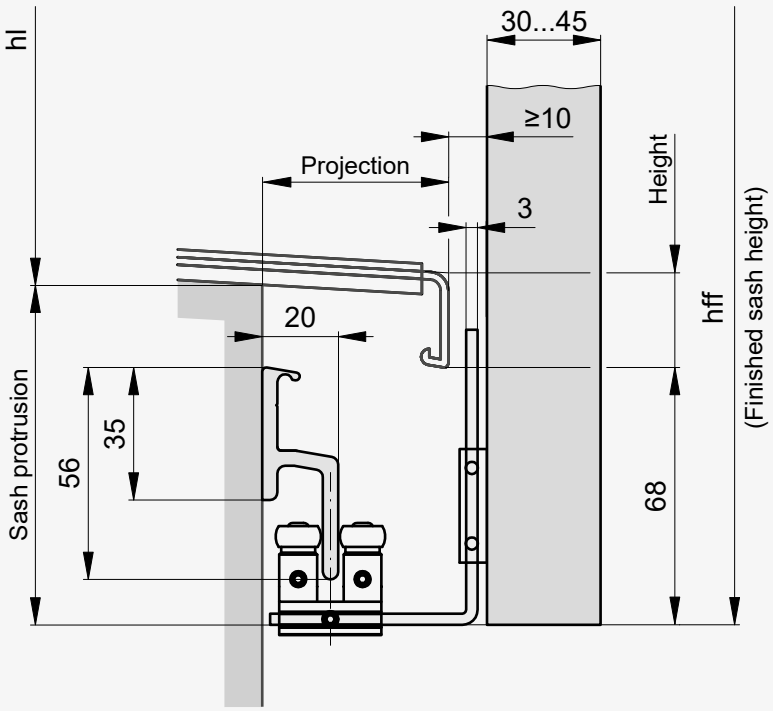


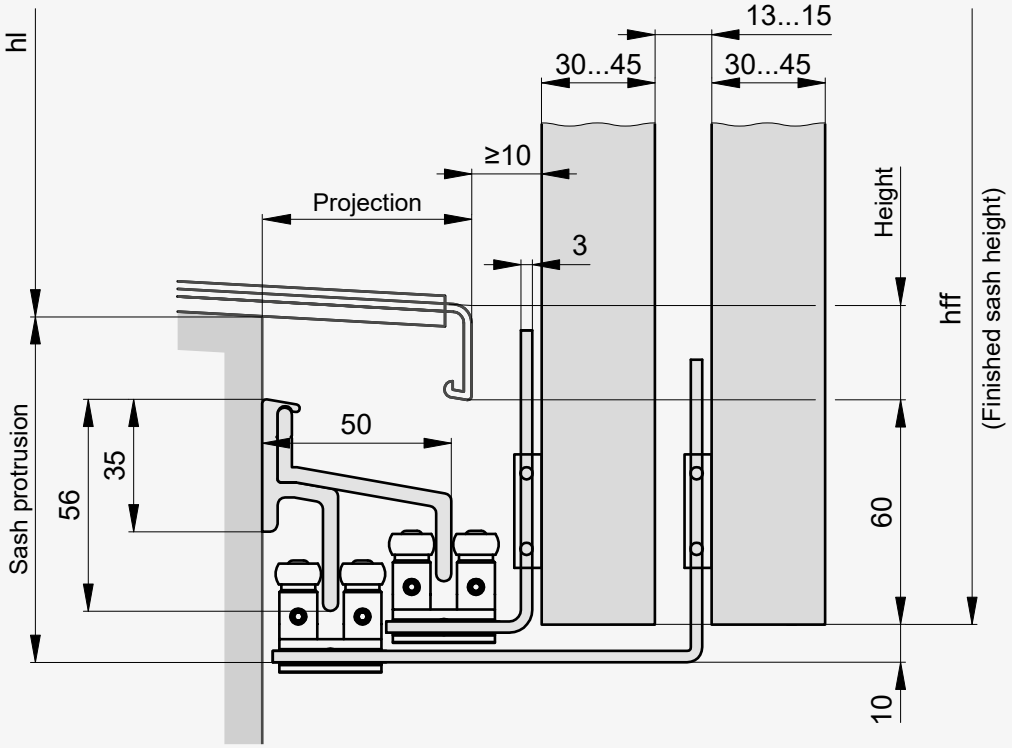


Also possible as 3-track version.

## Installation situations at bottom

**Vertical sections facade: Situation 6 | Guide rail: Type G**

Situation 6

**Manually**

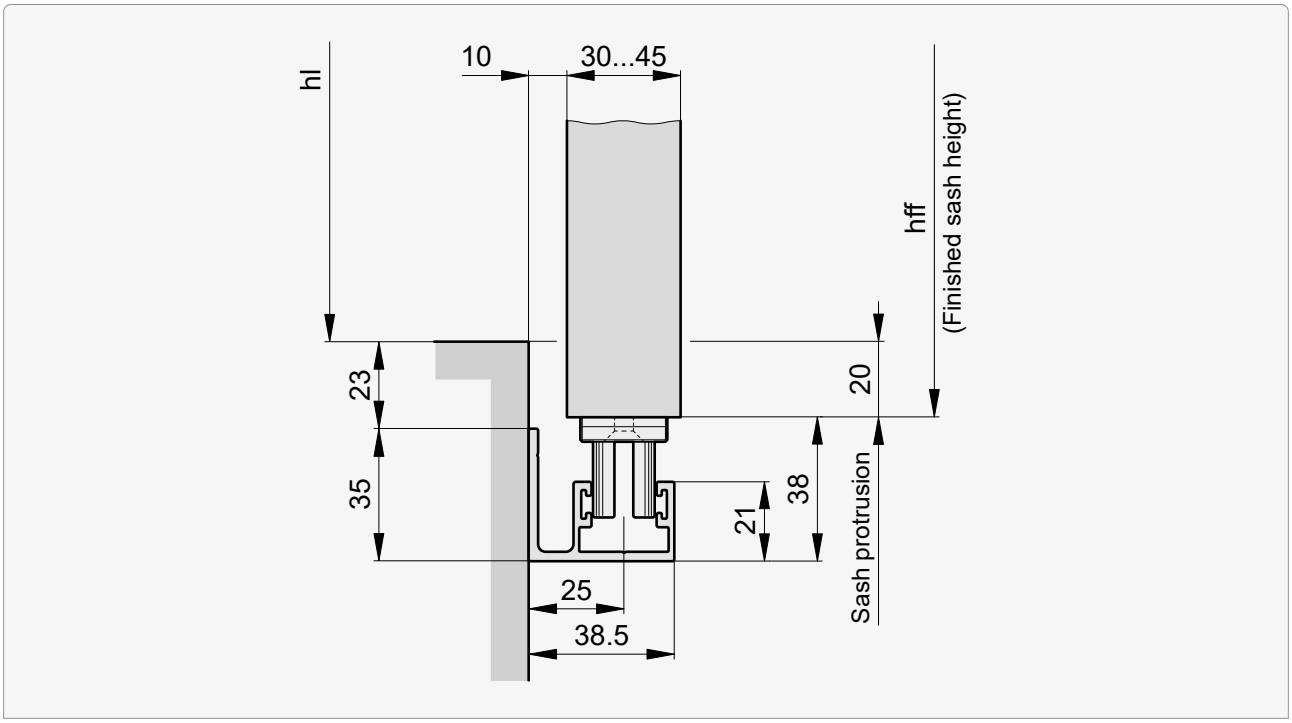


**Motor | Manually**

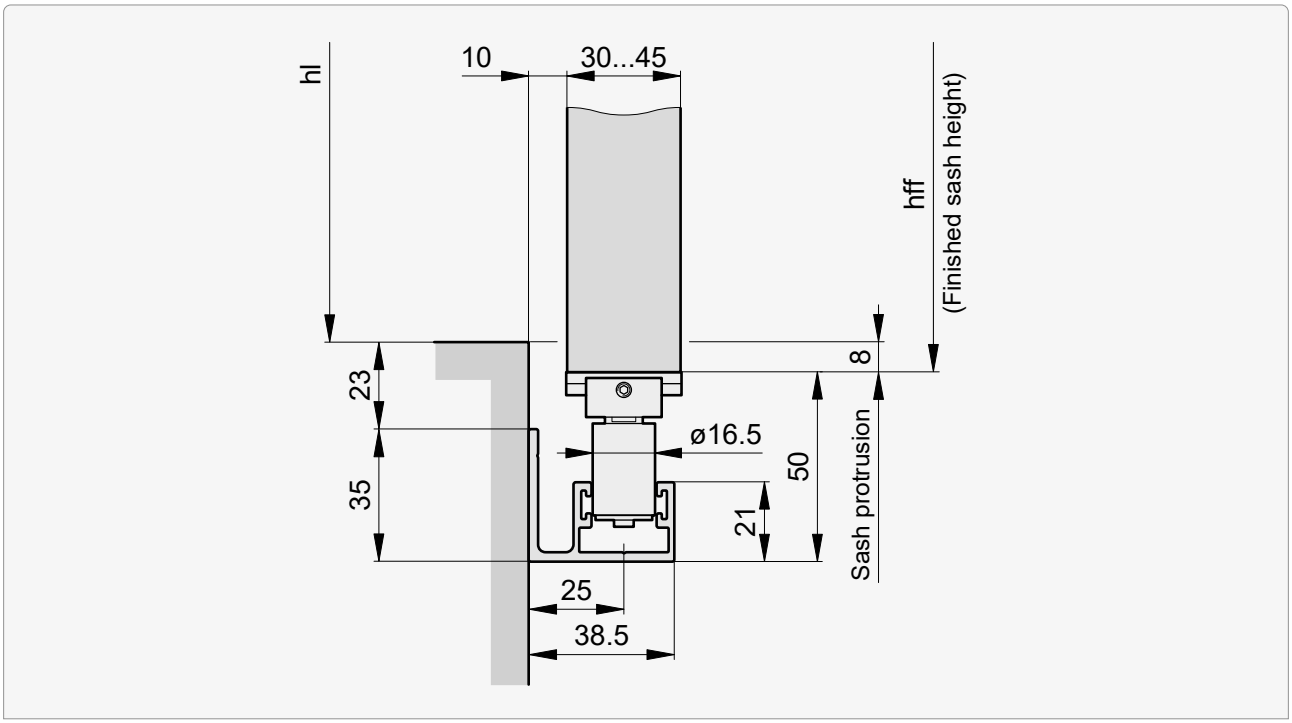


Frame 45 mm must be verified.

## Runner rails

### Type G

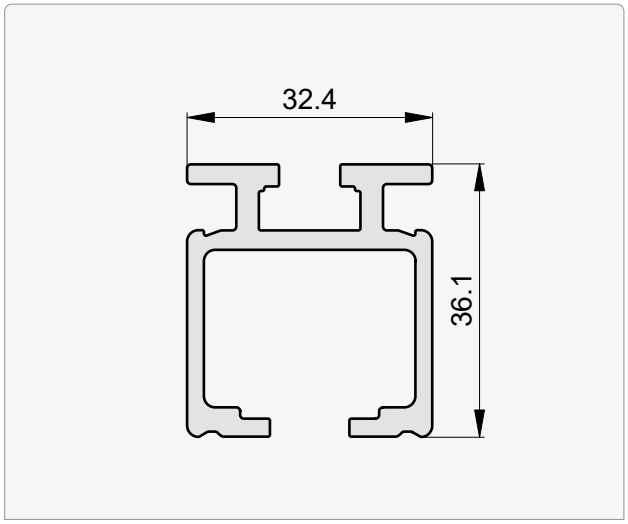


### Type G | 100 kg

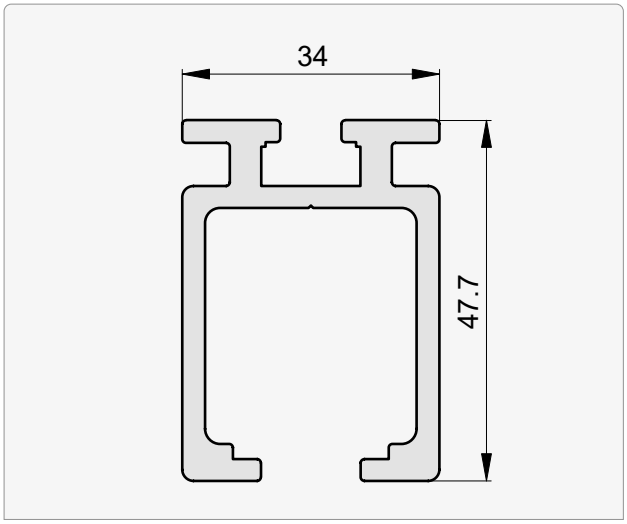


### Type K

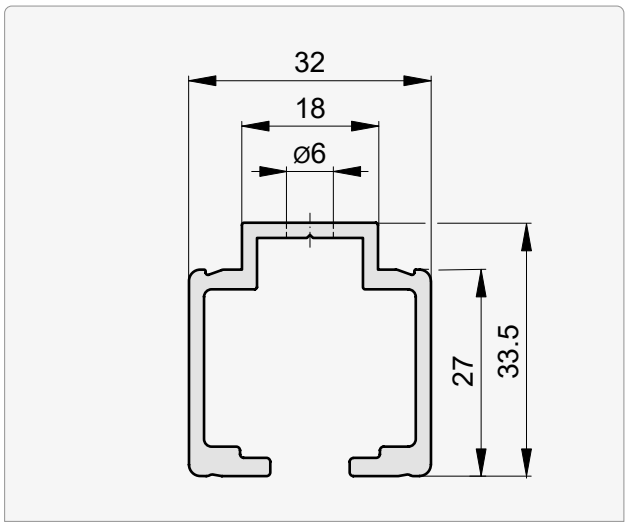


Ceiling installation only (DM)

## Guide rails

### Type G | Bottom installation

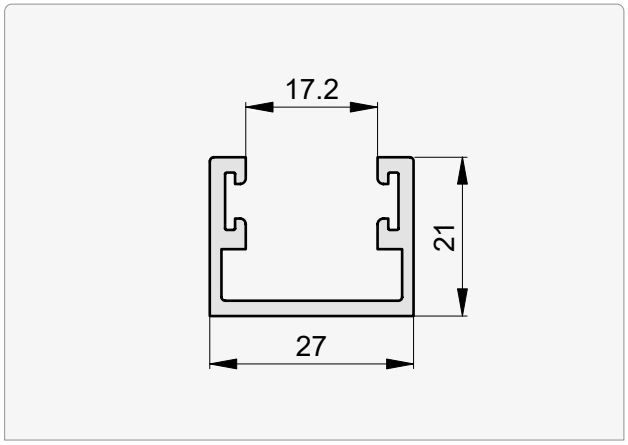


### Type G-Wall | Wall mounting

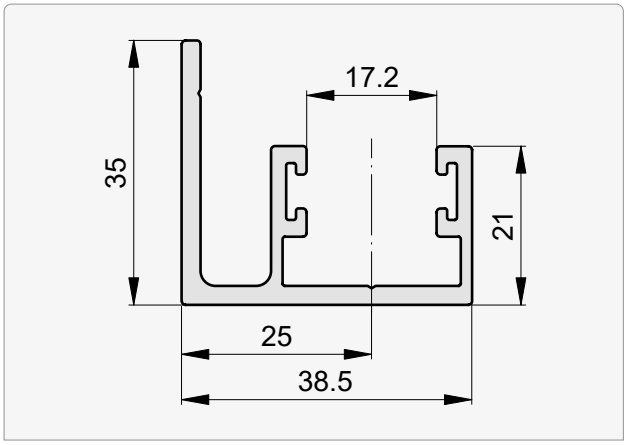


### Type L

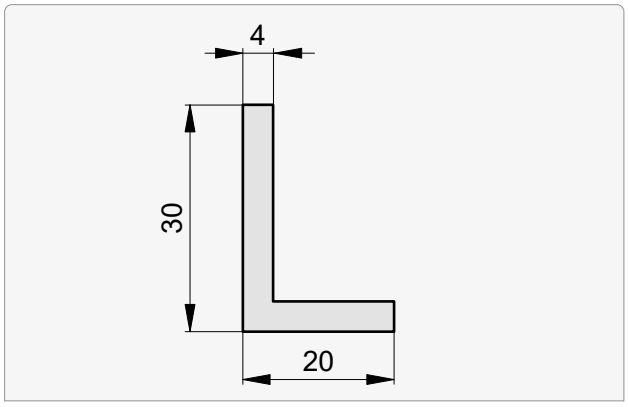


### Type Z

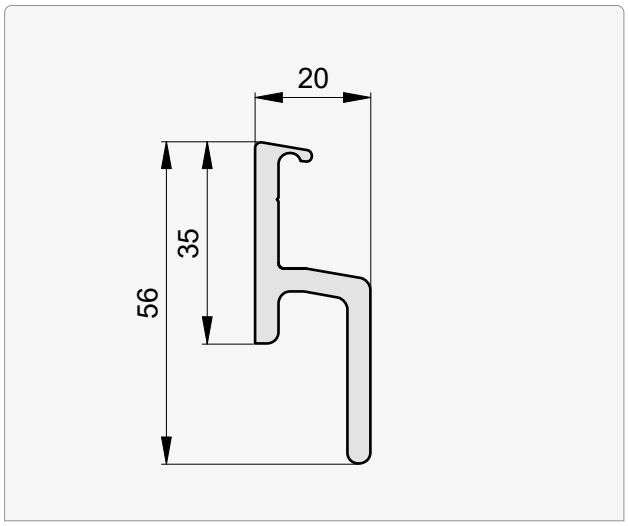


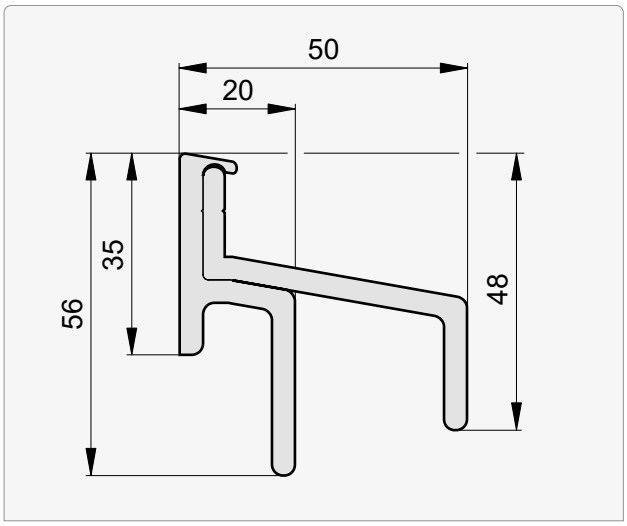

## Point guides

### Roller guide

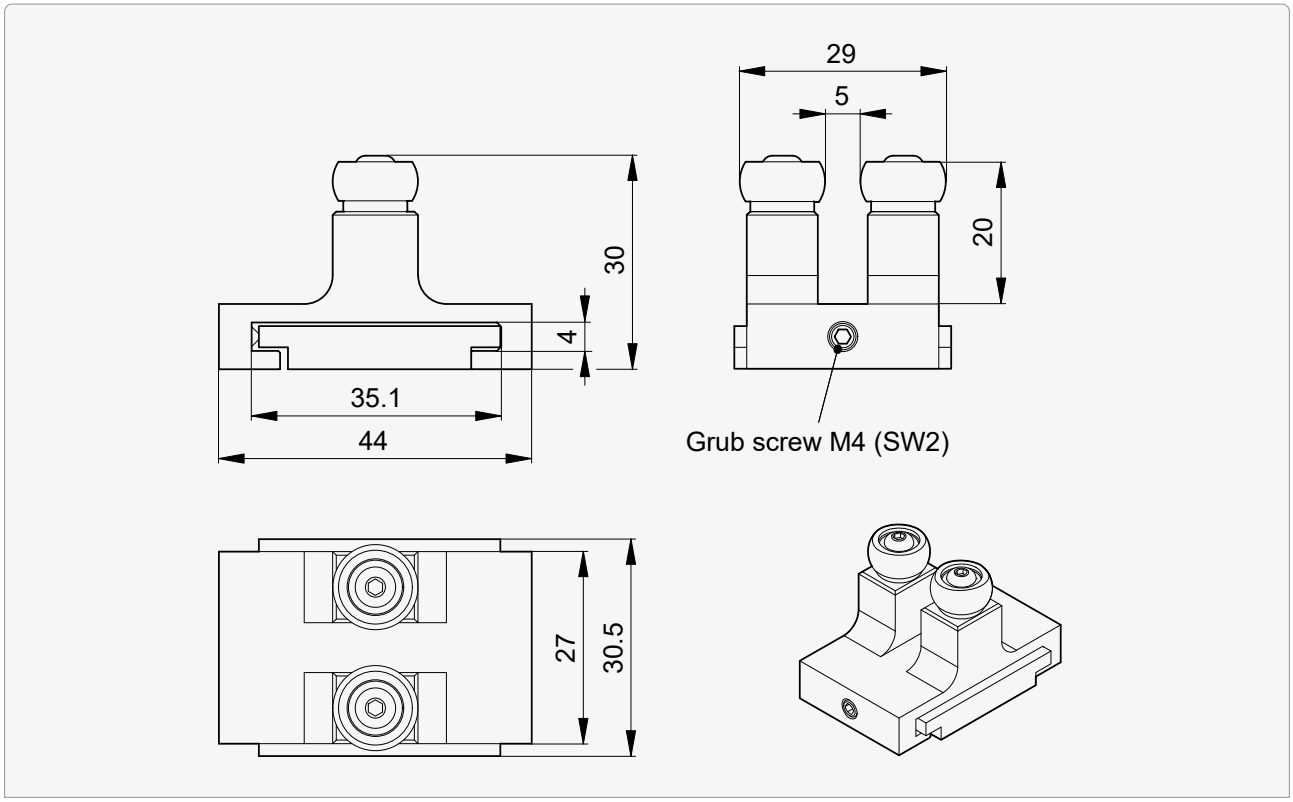


### Roller bolt

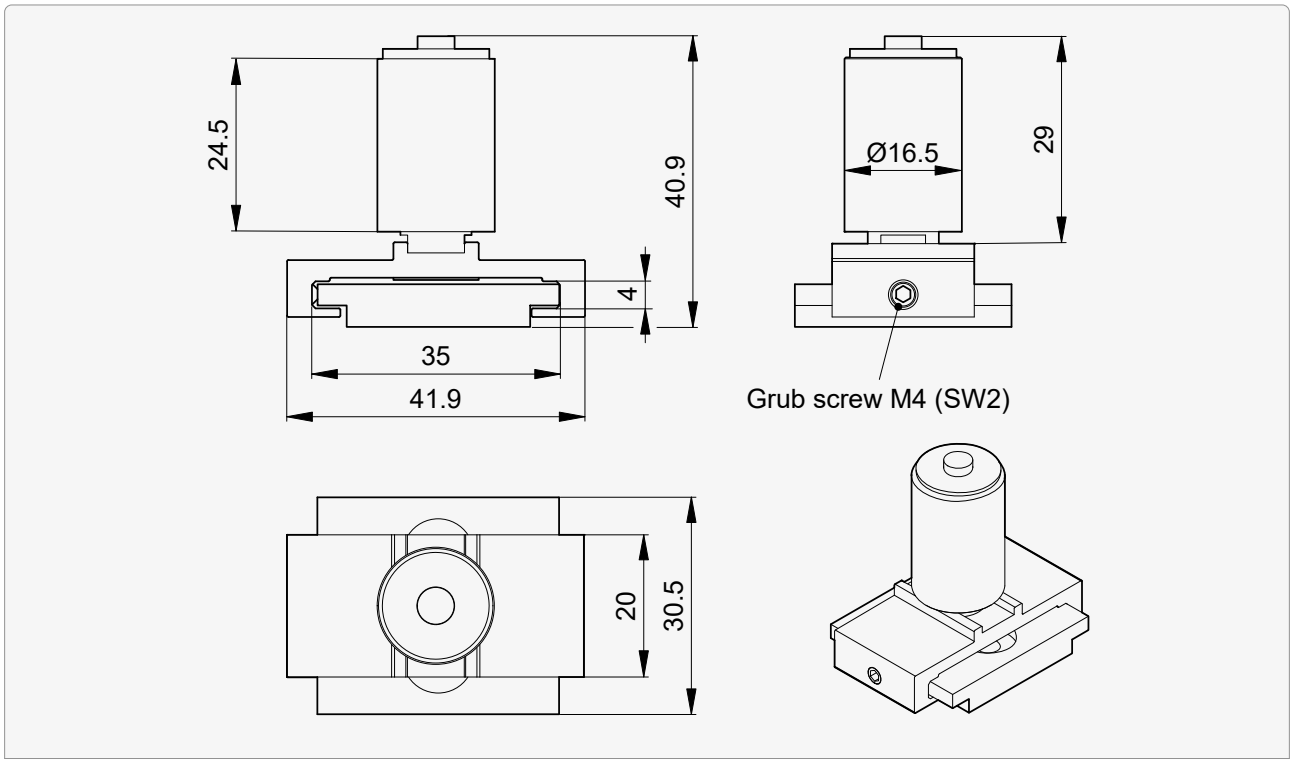


Used with guide rails type G and type G-Wall

## End stop diagrams

### Scheme 1L | 1R

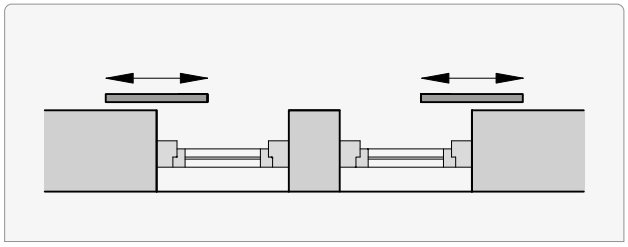

### Scheme 2

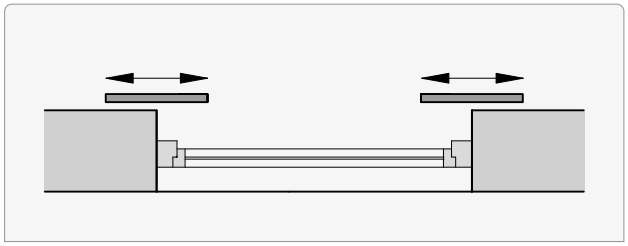

### Scheme 2L | 2R

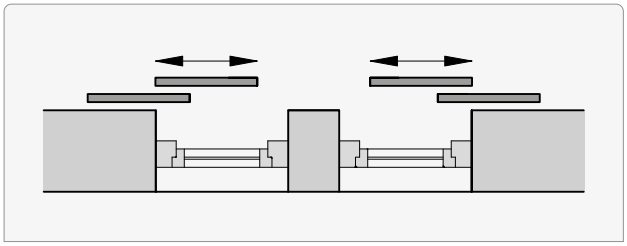

### Scheme 3L

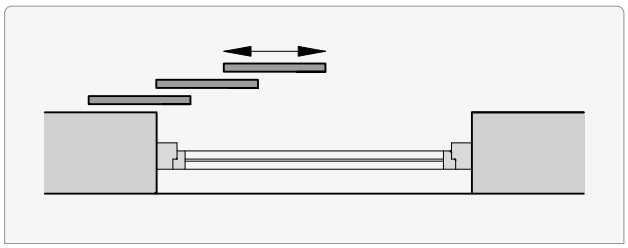

### Scheme 3R

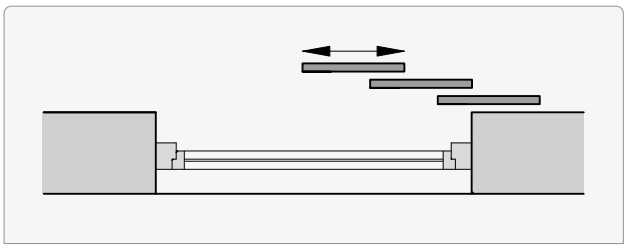

### Scheme 4

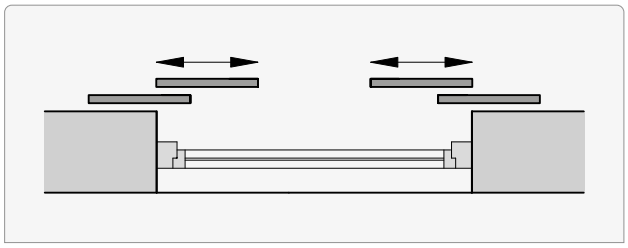

Limit dimensions ..... 6

## Sash protrusion | Sash overlap

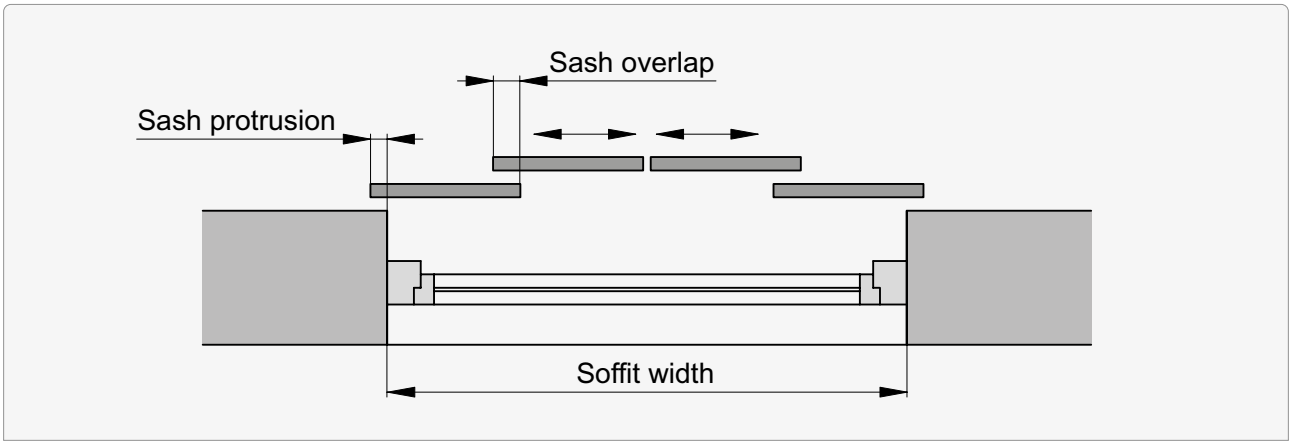


| Sash protrusion standard | Sash overlap standard | | |
|---|---|---|---|
| | Frame width 70 | Frame width 55 | Frame width 40 |
| 50 | 70 | 58 | 40 |

## Frieze

### Horizontal frieze

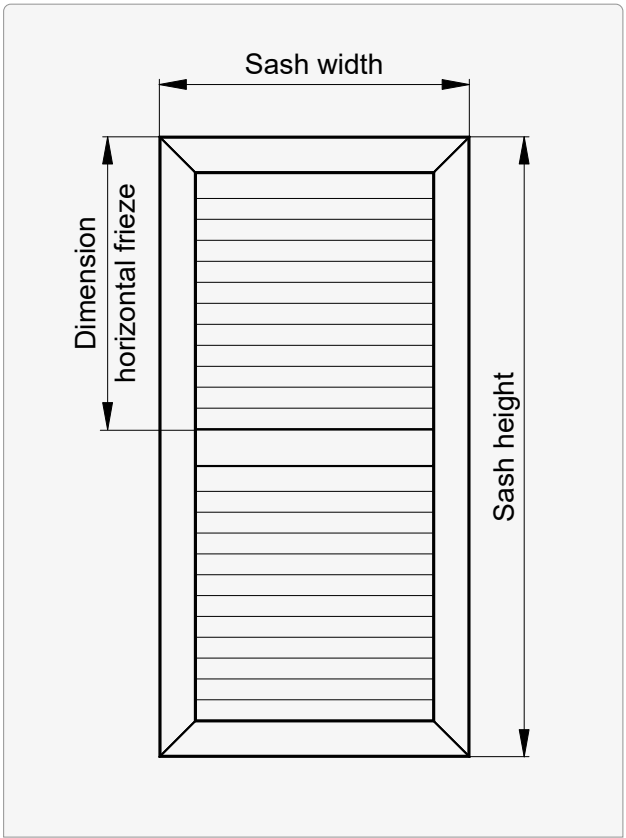


### Vertical frieze

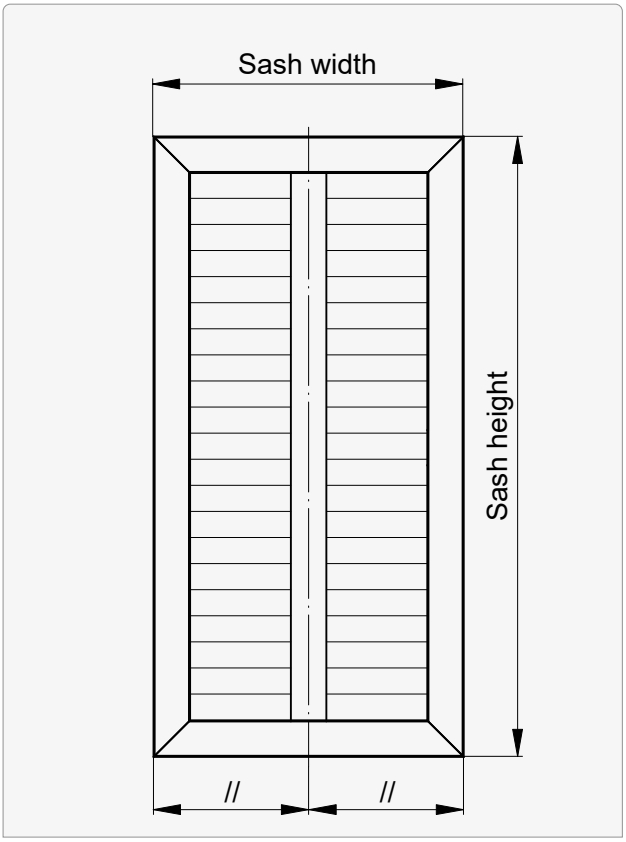


| Horizontal frieze dimension min. |
|---|
| 300 |

## Suspension brackets for runner rail installation

### 1-track

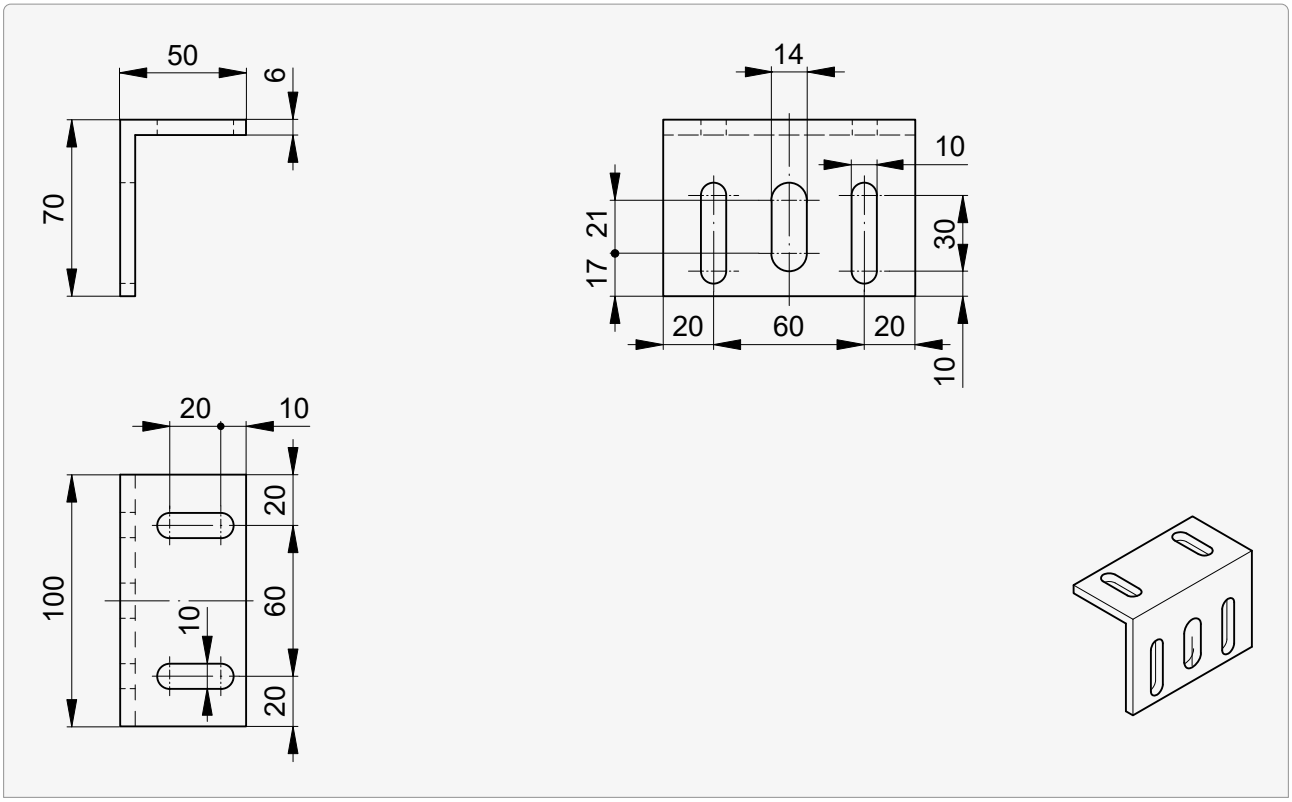


### 2-tracks

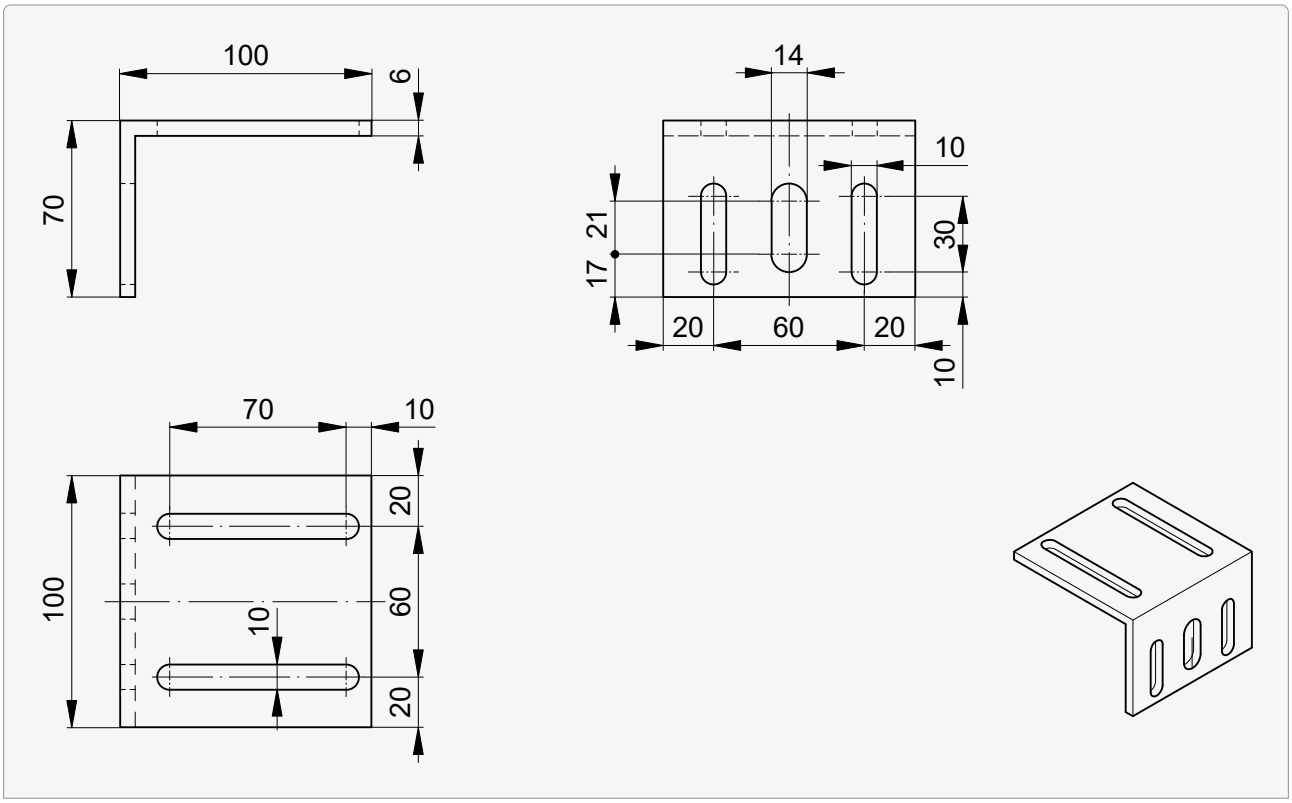

## Suspension brackets for runner rail installation

### 3-tracks

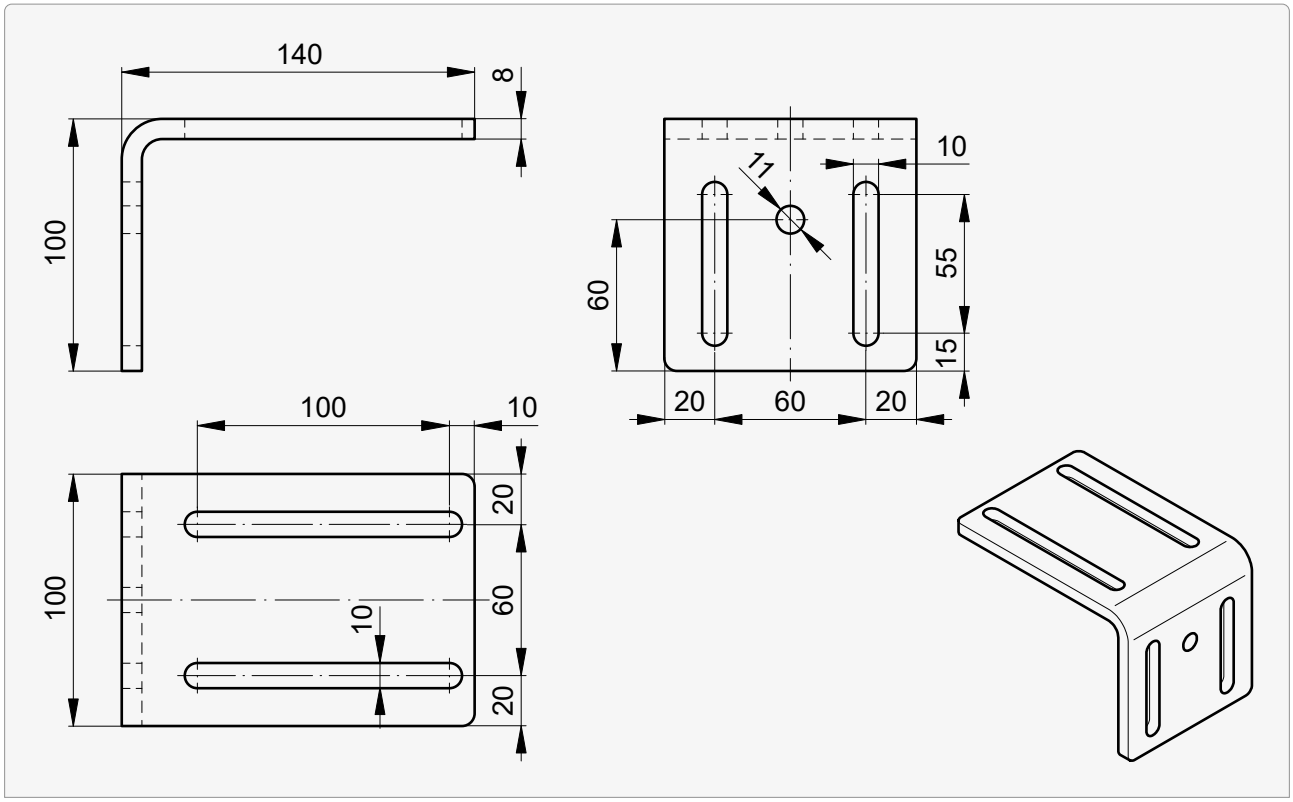


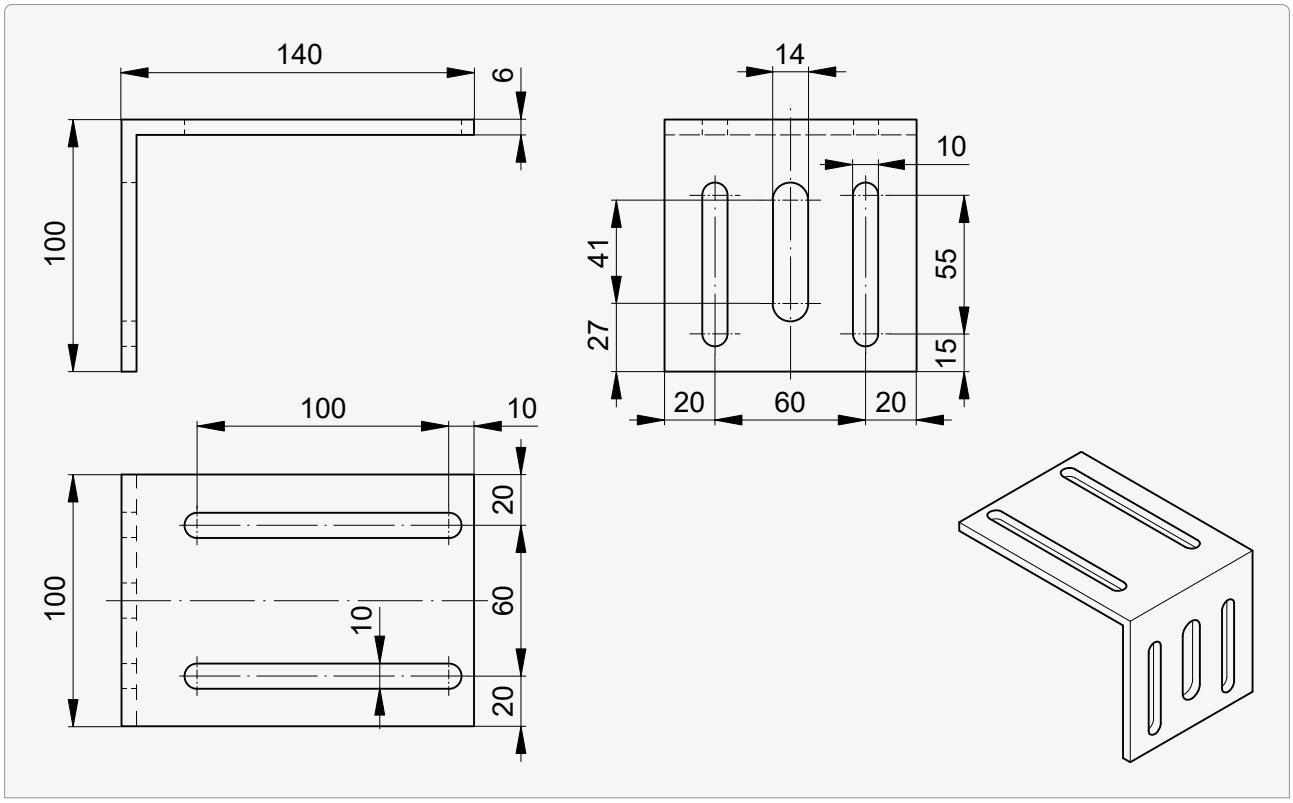

## Bottom guide bracket

### Version bottom guides type G

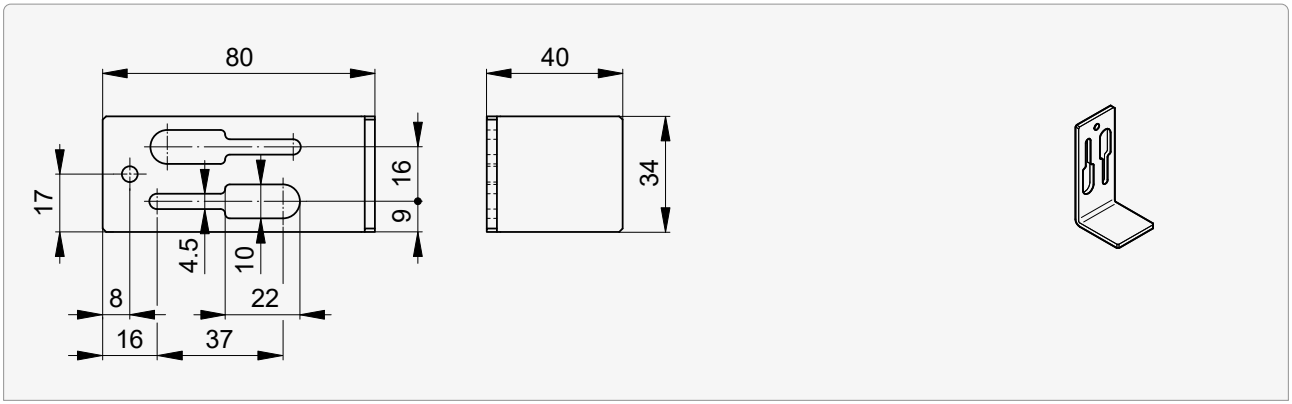


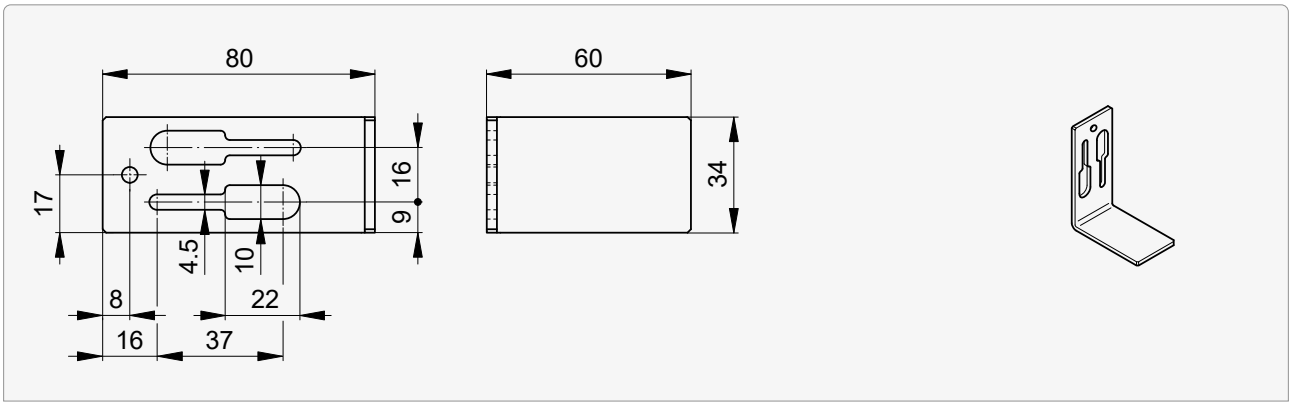


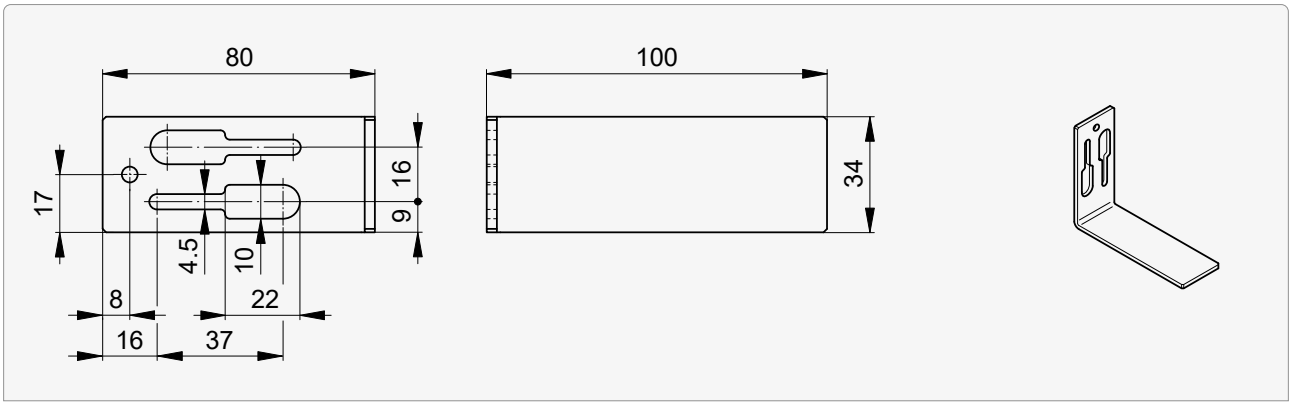


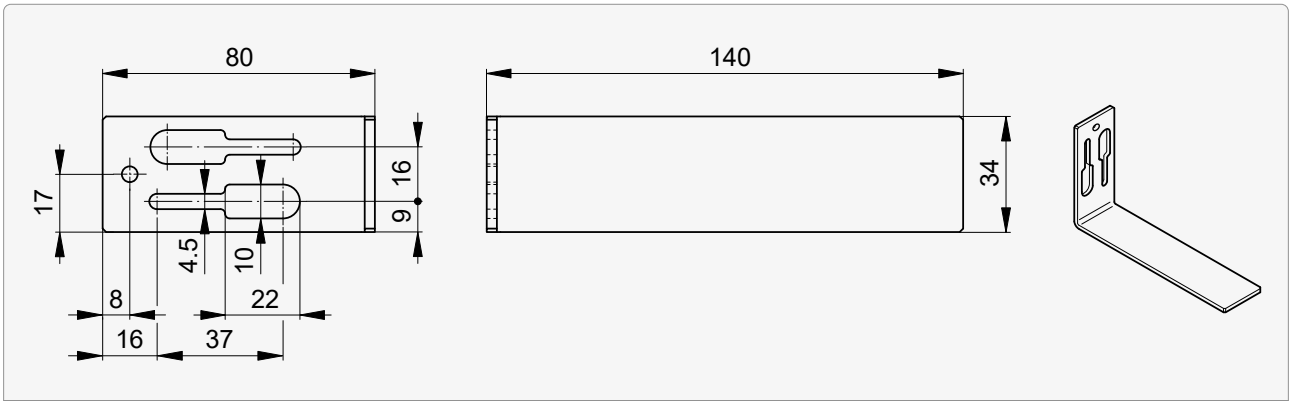

## Lockers

### Shutter lock 1 sash

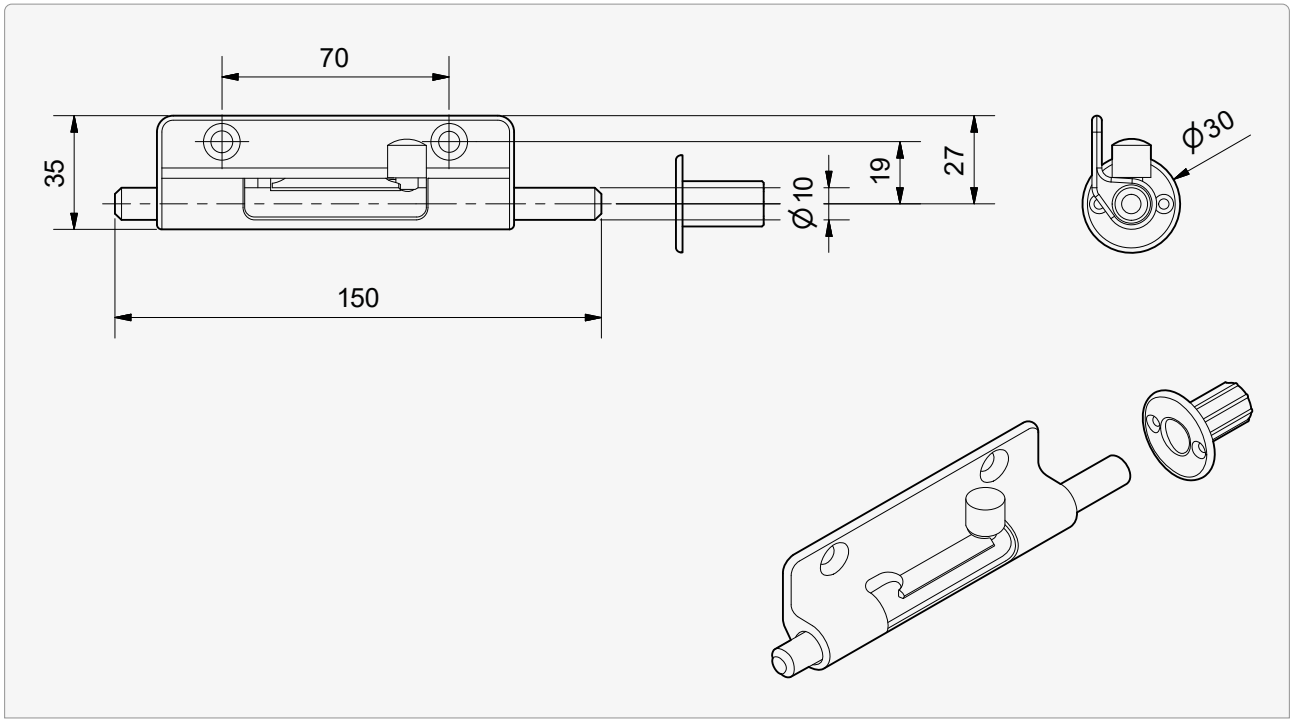


for scheme 1L | 1R | 2

### Shutter lock 2 sashes

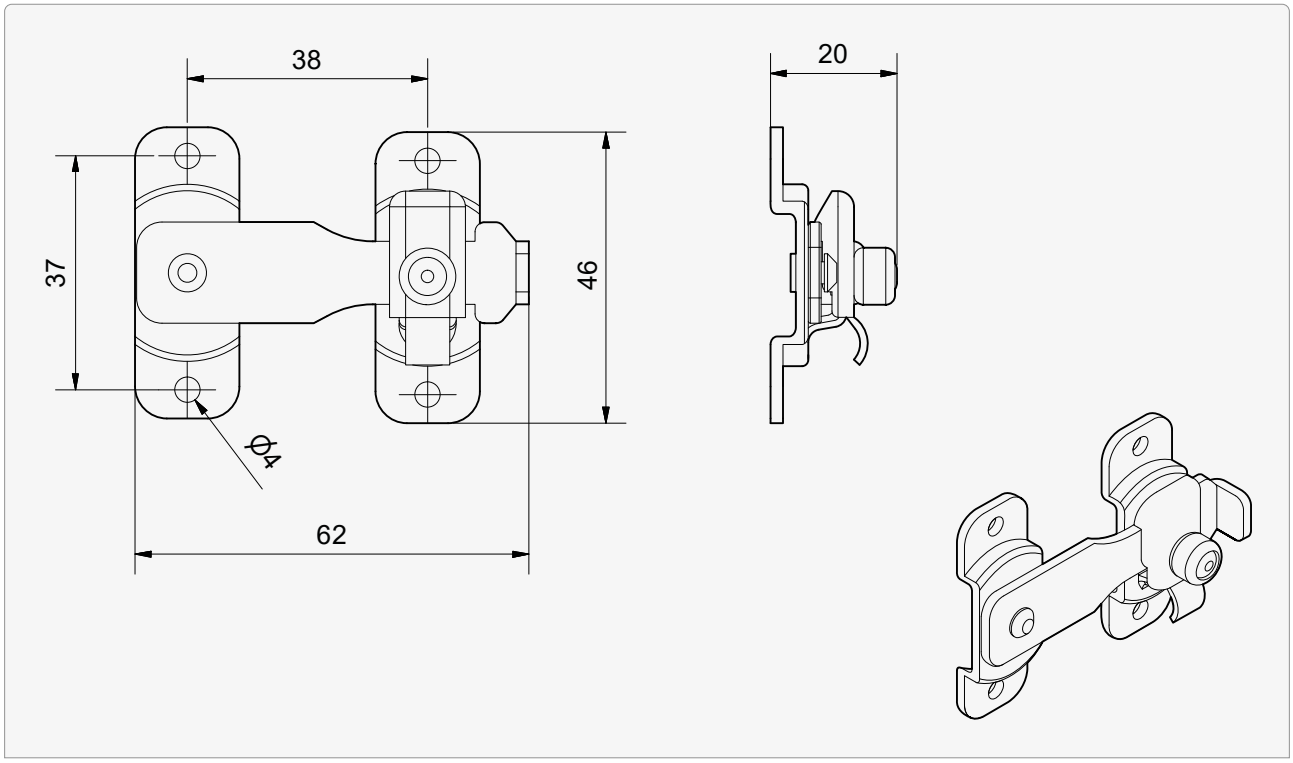


for scheme 2 and 4

## Lockers

### in rail

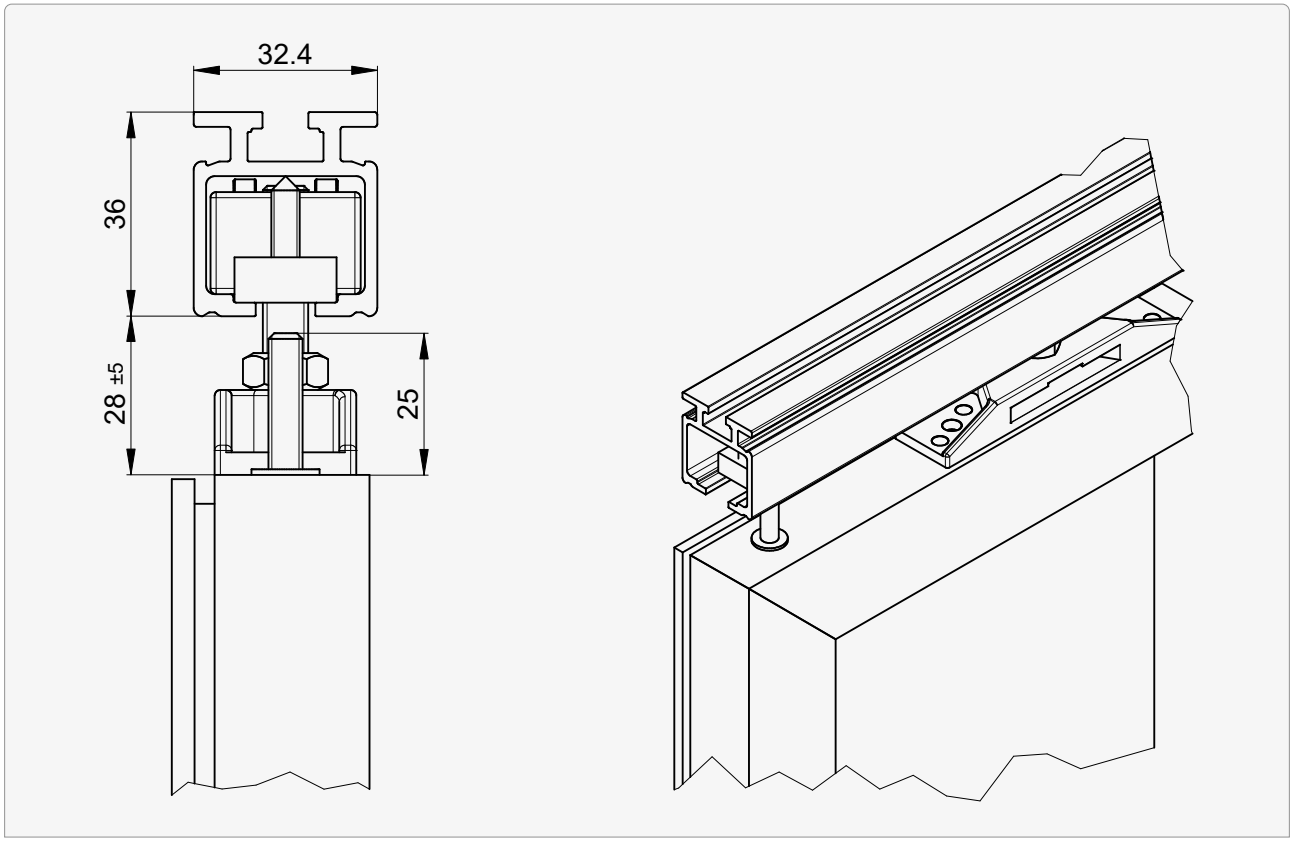

## Stoppers

~~H Slim~~

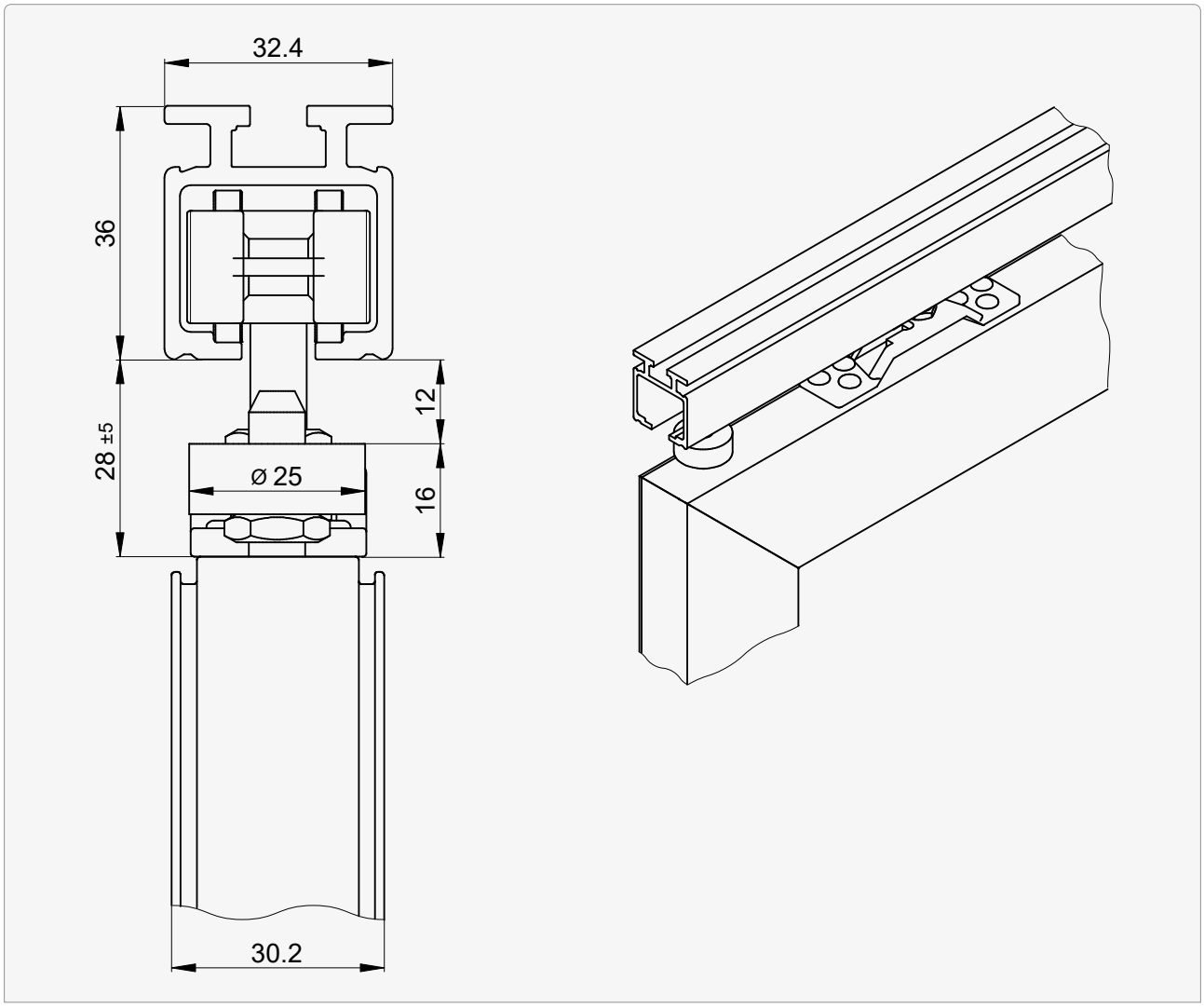

## Shell-type handle

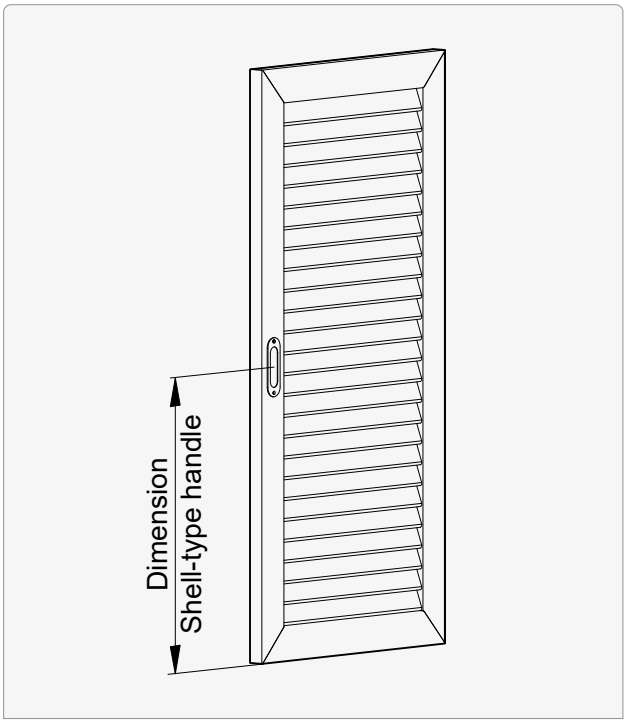

# Pantograph shutter


| | |
|---|---|
| Limit dimensions | **50** |
| Installation situations at top | **54** |
| Installation situations at bottom | **56** |
| Runner rail | **57** |
| Guide rails | **57** |
| End stop diagrams | **58** |
| Frieze | **59** |

## Limit dimensions

### Fixed slats

| Illustration | Model | Frame profile | Slat profile | |
|---|---|---|---|---|
| | A [1] | 71 x 33 | 50 x 10, with 2 reinforcement bars | |
| | **Width min. (bff)** | **Width* max. (bff)** | **Height min. (hff)** | **Height* max. (hff)** |
| | 275 | 550 | 500 | 2600 |

| Illustration | Model | Frame profile | Slat profile | |
|---|---|---|---|---|
| | A SLIM [1] | 40 x 33 | 50 x 10, with 2 reinforcement bars | |
| | **Width min. (bff)** | **Width* max. (bff)** | **Height min. (hff)** | **Height* max. (hff)** |
| | 275 | 550 | 500 | 2400 |

| Illustration | Model | Frame profile | Slat profile | |
|---|---|---|---|---|
| | T | 71 x 33 | 50 x 18, with reinforcement bars | |
| | **Width min. (bff)** | **Width* max. (bff)** | **Height min. (hff)** | **Height* max. (hff)** |
| | 275 | 550 | 500 | 2600 |

| Illustration | Model | Frame profile | Slat profile | |
|---|---|---|---|---|
| | R [1] | 71 x 33 | 60 x 6, with 2 reinforcement bars | |
| | **Width min. (bff)** | **Width* max. (bff)** | **Height min. (hff)** | **Height* max. (hff)** |
| | 275 | 550 | 500 | 2600 |

[1] Permitted gap between top/bottom slat and frame: 2 mm
Permitted inclination difference: 1 mm

* **bff max.** and **hff max.** are always dependent on each other.
Starting with certain widths/heights, vertical/horizontal friezes become necessary.

**In the event of a facade offset > 500 mm (e.g. for use on balconies and loggias), the system must be structurally inspected and tested in situ!**

Dimensions should always be viewed **from inside to outside**.

## Limit dimensions

### Fixed slats

| Illustration | Model | Frame profile | Slat profile | |
|---|---|---|---|---|
| | H Alu | 55 x 45 | 35 x 15<br>60 x 15 | |
| | **Width min. (bff)** | **Width* max. (bff)** | **Height min. (hff)** | **Height* max. (hff)** |
| | 275 | 550 | 500 | 2600 |

| Illustration | Model | Frame profile | Slat profile | |
|---|---|---|---|---|
| | H Alu SLIM | 42 x 31 | 35 x 15<br>60 x 15 | |
| | **Width min. (bff)** | **Width* max. (bff)** | **Height min. (hff)** | **Height* max. (hff)** |
| | 275 | 550 | 500 | 2300 |

| Illustration | Model | Frame profile | Slat profile | |
|---|---|---|---|---|
| | H Wood | 55 x 45 | 60 x 15, Siberian larch, untreated | |
| | **Width min. (bff)** | **Width* max. (bff)** | **Height min. (hff)** | **Height* max. (hff)** |
| | 275 | 550 | 500 | 2600 |

| Illustration | Model | Frame profile | Slat profile | |
|---|---|---|---|---|
| | H Wood SLIM | 42 x 31 | 60 x 15, Siberian larch, untreated | |
| | **Width min. (bff)** | **Width* max. (bff)** | **Height min. (hff)** | **Height* max. (hff)** |
| | 275 | 550 | 500 | 2300 |

* **bff max.** and **hff max.** are always dependent on each other.
Starting with certain widths/heights, vertical/horizontal friezes become necessary.

**In the event of a facade offset > 500 mm (e.g. for use on balconies and loggias), the system must be structurally inspected and tested in situ!**

Dimensions should always be viewed **from inside to outside**.

**bff** Finished sash width

**hff** Finished sash height

## Limit dimensions

### Closed models

| Illustration | Model | Frame profile | Filling | |
|---|---|---|---|---|
| | S | SYS 70 x 30 | 2 mm aluminum sheet | |
| | **Width min. (bff)** | **Width* max. (bff)** | **Height min. (hff)** | **Height* max. (hff)** |
| | 275 | 550 | 500 | 2600 |

| Illustration | Model | Frame profile | Filling | |
|---|---|---|---|---|
| | S SLIM | 40 x 31 | 2 mm aluminum sheet | |
| | **Width min. (bff)** | **Width* max. (bff)** | **Height min. (hff)** | **Height* max. (hff)** |
| | 275 | 550 | 500 | 2600 |

| Illustration | Model | Frame profile | Filling | |
|---|---|---|---|---|
| | SL | SYS 70 x 30 | 2 mm aluminum sheet, perforated<br>Standard perforations:<br>Q 20 x 20, Q 35 x 35, RU 20 and RU 30<br>Distance between hole edges: ≥ 20 | |
| | **Width min. (bff)** | **Width* max. (bff)** | **Height min. (hff)** | **Height* max. (hff)** |
| | 275 | 550 | 500 | 2600 |

| Illustration | Model | Frame profile | Filling | |
|---|---|---|---|---|
| | SL SLIM | 40 x 31 | 2 mm aluminum sheet, perforated<br>Standard perforations:<br>Q 20 x 20, Q 35 x 35, RU 20 and RU 30<br>Distance between hole edges: ≥ 20 | |
| | **Width min. (bff)** | **Width* max. (bff)** | **Height min. (hff)** | **Height* max. (hff)** |
| | 275 | 550 | 500 | 2600 |

* **bff max.** and **hff max.** are always dependent on each other.
Starting with certain widths/heights, vertical/horizontal friezes become necessary.

**In the event of a facade offset > 500 mm (e.g. for use on balconies and loggias), the system must be structurally inspected and tested in situ!**

Dimensions should always be viewed **from inside to outside**.

## Limit dimensions

### Closed models

| Illustration | Model | Frame profile | Filling | |
|---|---|---|---|---|
| | Sentum | 55 x 45 | 2 mm aluminum expanded metal<br>Mesh according to choice (optional) | |
| | **Width min. (bff)** | **Width* max. (bff)** | **Height min. (hff)** | **Height* max. (hff)** |
| | 275 | 550 | 500 | 2600 |

| Illustration | Model | Frame profile | Filling | |
|---|---|---|---|---|
| | Sentum SLIM | 42 x 31 | 2 mm aluminum expanded metal<br>Mesh according to choice (optional) | |
| | **Width min. (bff)** | **Width* max. (bff)** | **Height min. (hff)** | **Height* max. (hff)** |
| | 275 | 550 | 500 | 2300 |

| Illustration | Model | Frame profile | Filling | |
|---|---|---|---|---|
| | Platina | 71 x 33 | 8 mm Fundermax Uni-Decor plate | |
| | **Width min. (bff)** | **Width* max. (bff)** | **Height min. (hff)** | **Height* max. (hff)** |
| | 275 | 550 | 500 | 2600 |

| Illustration | Model | Frame profile | Filling | |
|---|---|---|---|---|
| | Platina SLIM | 42 x 31 | 8 mm Fundermax Uni-Decor plate | |
| | **Width min. (bff)** | **Width* max. (bff)** | **Height min. (hff)** | **Height* max. (hff)** |
| | 275 | 550 | 500 | 2600 |

* **bff max.** and **hff max.** are always dependent on each other.
Starting with certain widths/heights, vertical/horizontal friezes become necessary.

**In the event of a facade offset > 500 mm (e.g. for use on balconies and loggias), the system must be structurally inspected and tested in situ!**

Dimensions should always be viewed **from inside to outside**.

**bff** Finished sash width

**hff** Finished sash height

## Installation situations at top

### Vertical section: Wall mounting (WM)

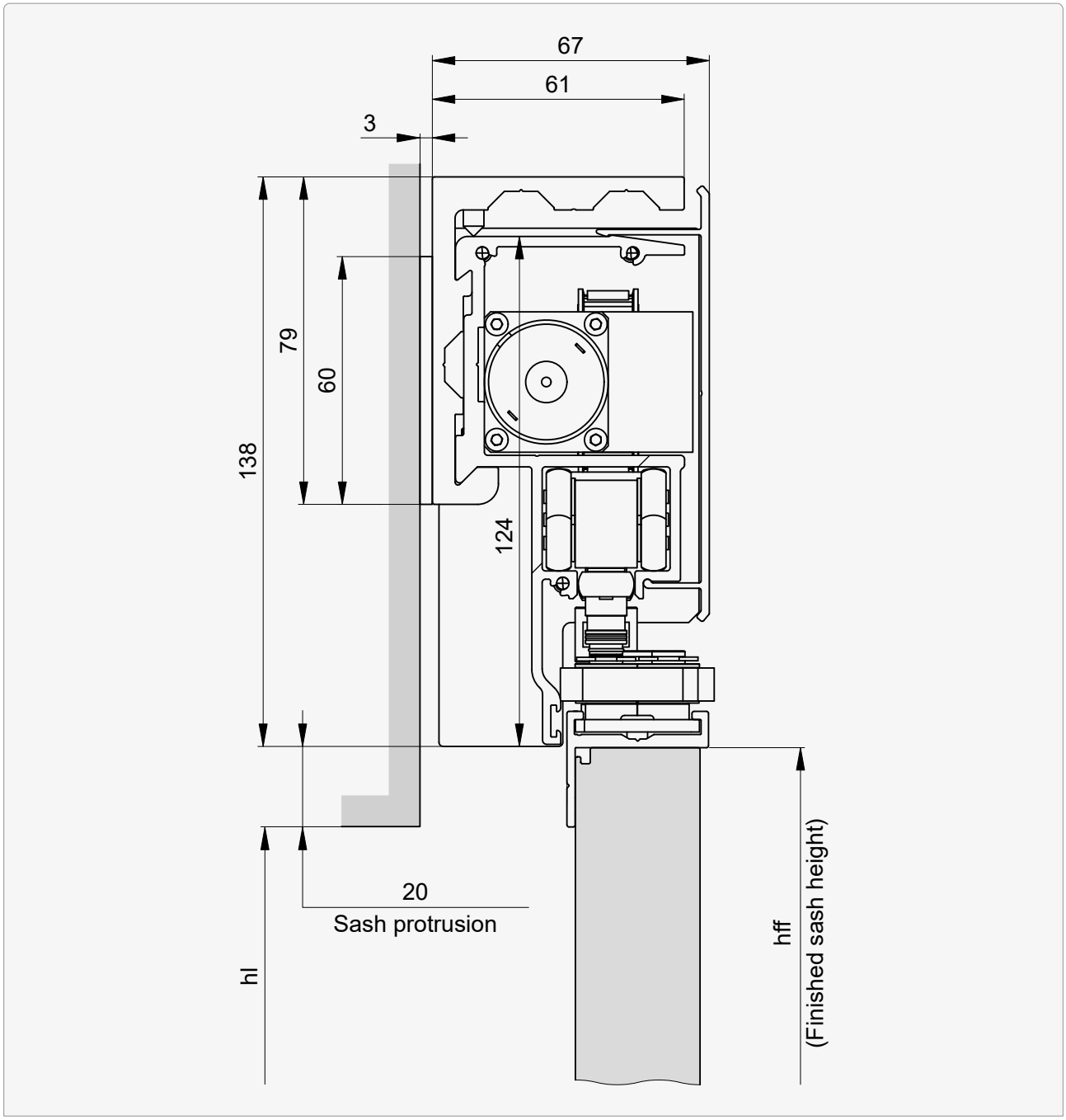

## Installation situations at top

### Vertical section: Ceiling installation (DM)

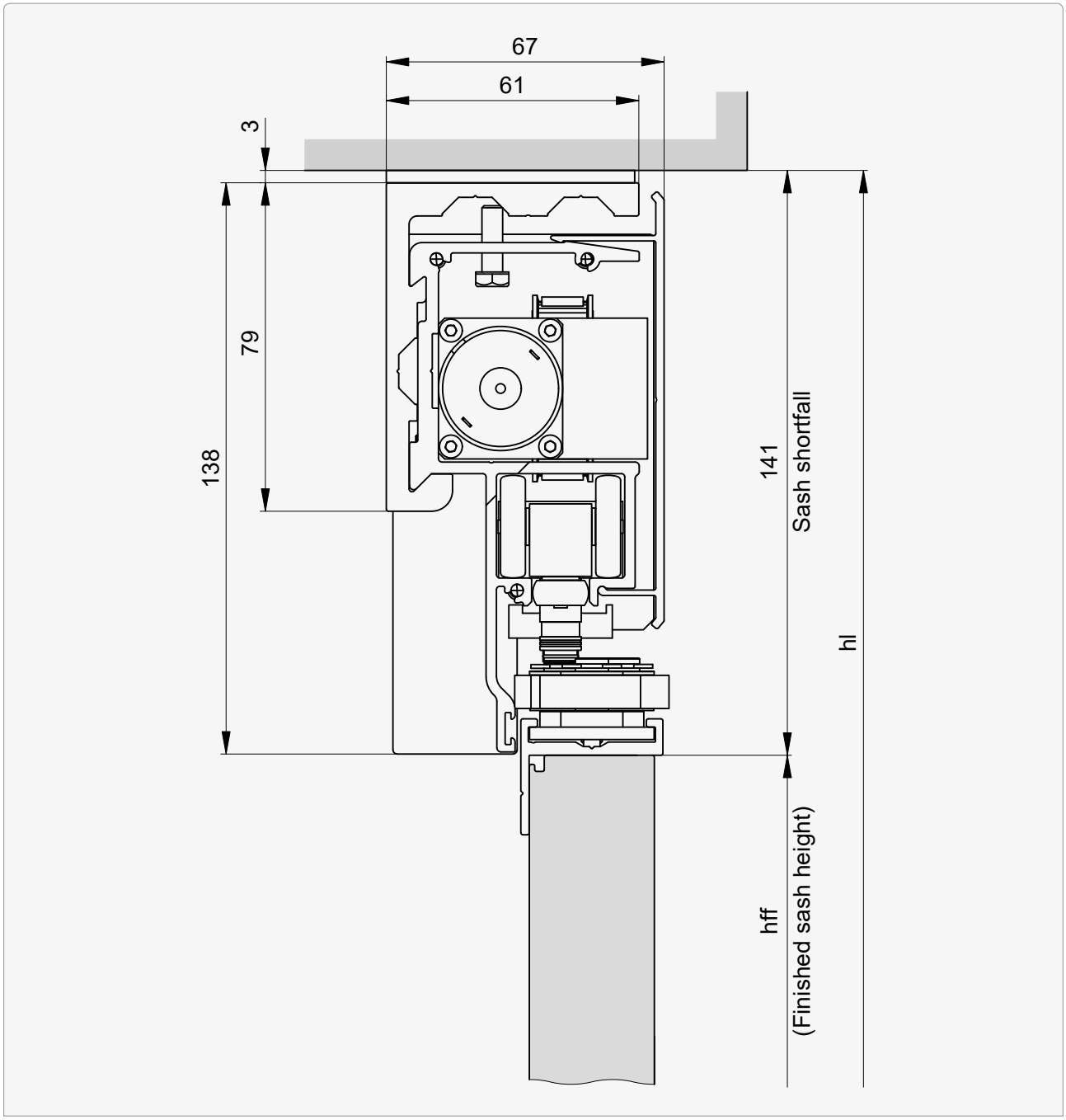

## Installation situations at bottom

### Vertical section: S1 bottom wall mounting

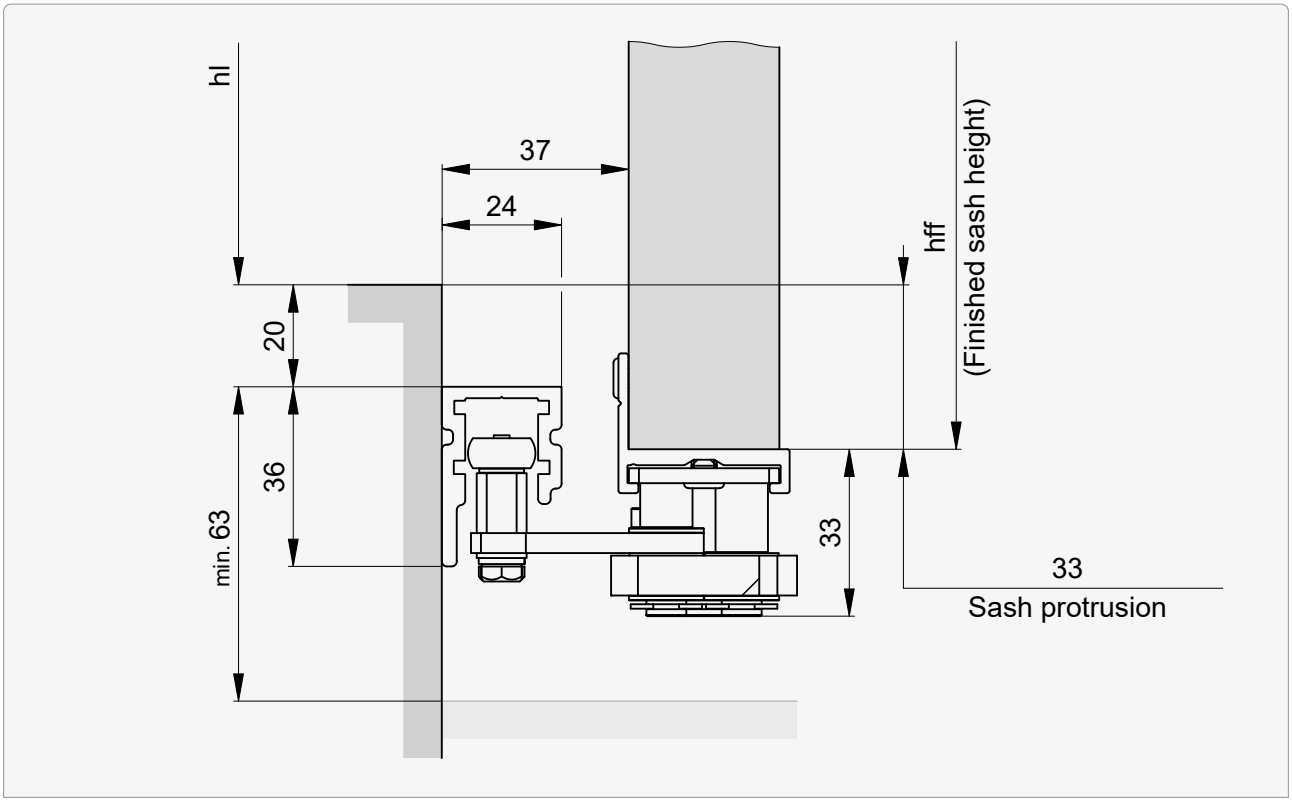


### Vertical section: S2 bottom floor mounting

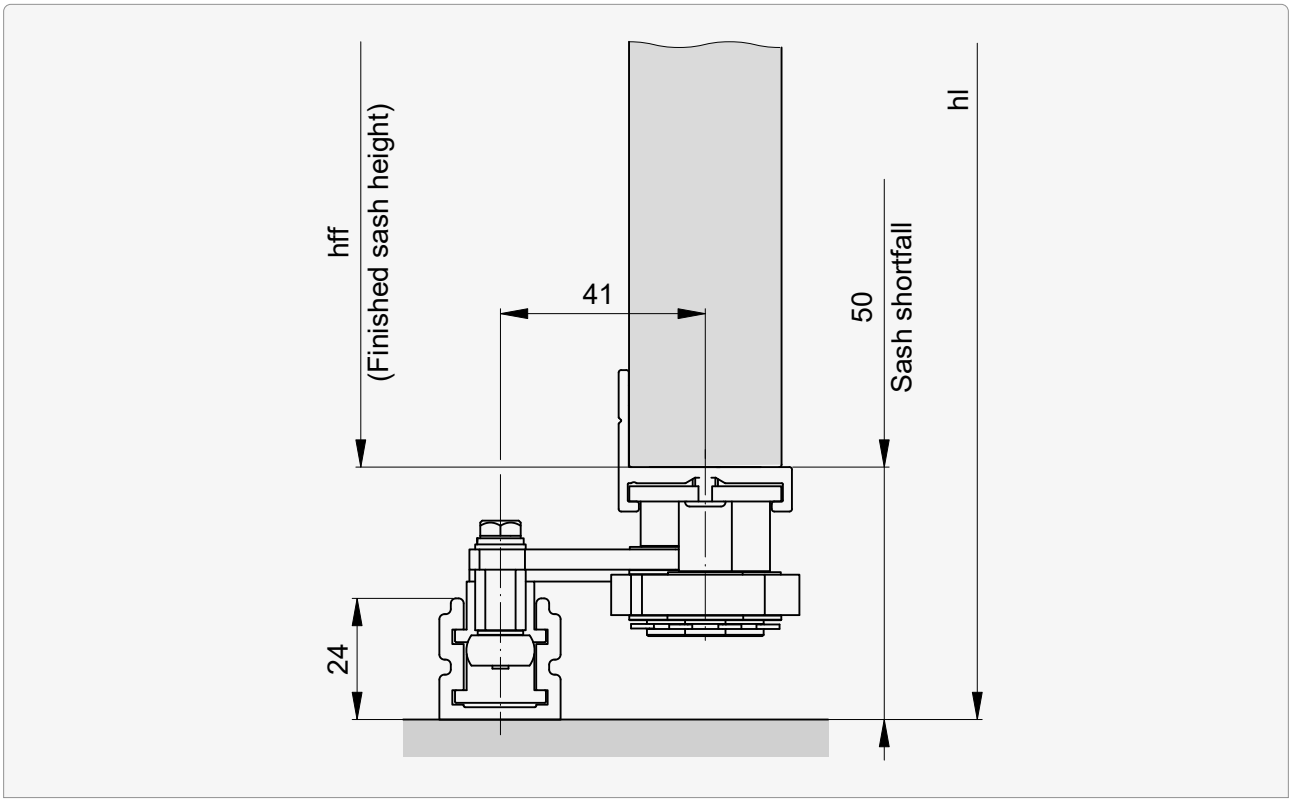

## Runner rail

### Type G

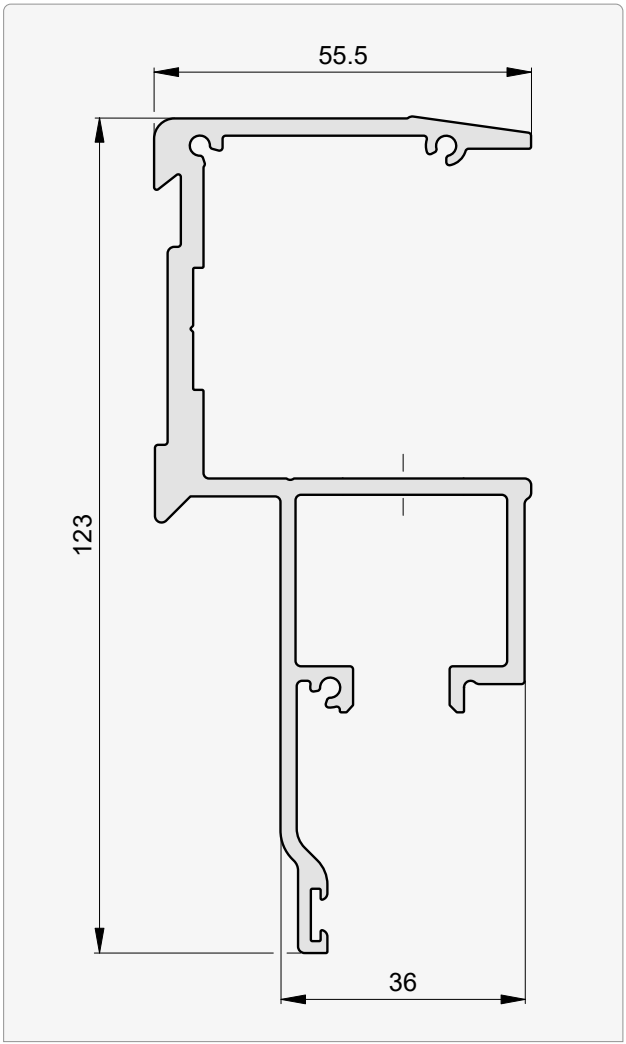


## Guide rails

### Type H | Bottom installation

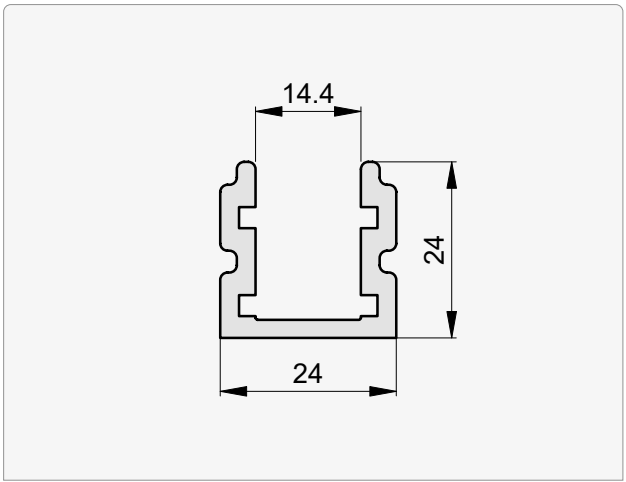


### Type H | Wall mounting

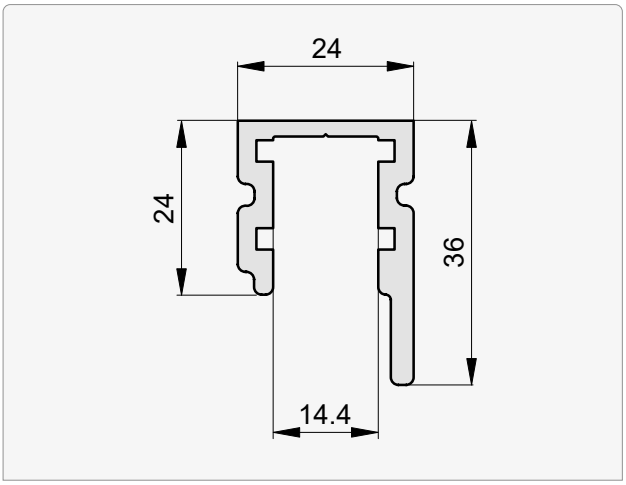

## End stop diagrams

### Scheme 4L

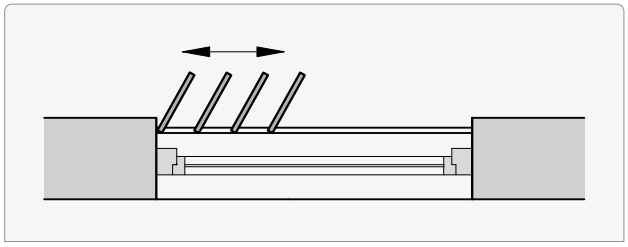

### Scheme 4R

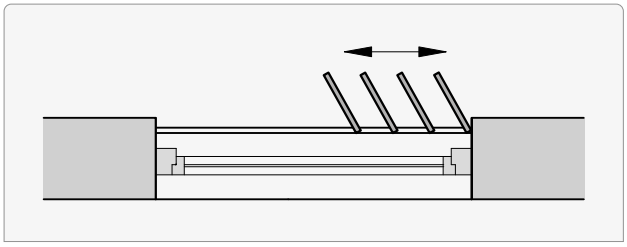

Schematic diagram of the pantograph shutters for 2 – 6 sashes

The **installation situations at top** and **at bottom** can be **combined**.

Limit dimensions ..... **50**

## Frieze

### Horizontal frieze

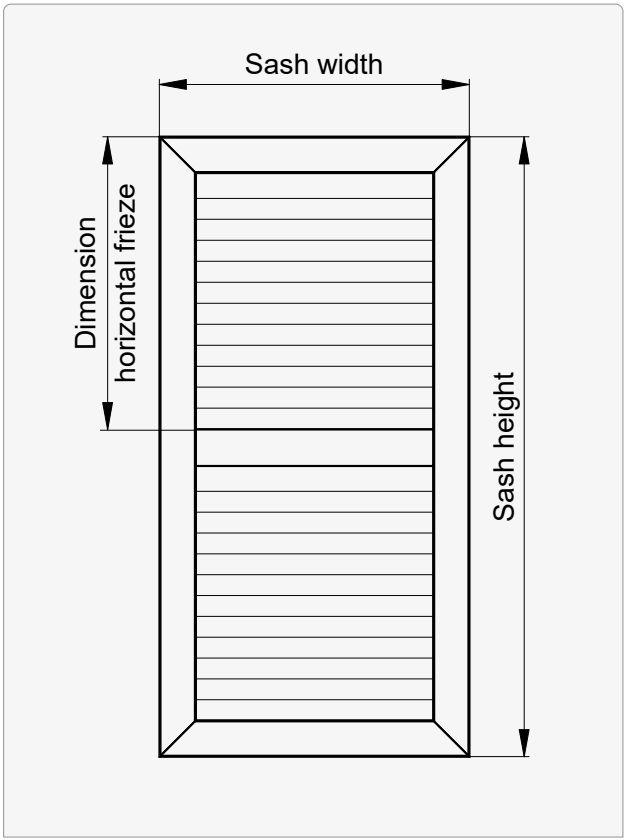


| Horizontal frieze dimension min. |
| --- |
| 300 |

# Sliding bi-fold shutter


| | |
|---|---|
| Limit dimensions | **62** |
| Installation situations at top | **66** |
| Installation situations at bottom | **68** |
| Runner rails | **70** |
| Guide rails | **70** |
| End stop diagrams | **71** |
| Design examples | **72** |
| Frieze | **73** |
| Pull latches | **73** |
| Integrated overwinding protection | **74** |

## Limit dimensions

### Fixed slats

| Illustration | Model | Frame profile | Slat profile | | |
|---|---|---|---|---|---|
| | A [2] | 70 x 30 | 50 x 10, with 2 reinforcement bars | | |
| | **Width min. (bff)** | **Width* max. (bff)** | **Hight min. (hff)** | **Hight* max. (hff)** | **Surface[1] max. [m²/Sash]** |
| | 275 | 600 | 500 | 3000 | 1.5 |

| Illustration | Model | Frame profile | Slat profile | | |
|---|---|---|---|---|---|
| | A SLIM [2] | 40 x 30 | 50 x 10, with 2 reinforcement bars | | |
| | **Width min. (bff)** | **Width* max. (bff)** | **Hight min. (hff)** | **Hight* max. (hff)** | **Surface[1] max. [m²/Sash]** |
| | 275 | 600 | 500 | 2500 | 1.3 |

| Illustration | Model | Frame profile | Slat profile | | |
|---|---|---|---|---|---|
| | T | 70 x 30 | 50 x 18, with 2 reinforcement bars | | |
| | **Width min. (bff)** | **Width* max. (bff)** | **Hight min. (hff)** | **Hight* max. (hff)** | **Surface[1] max. [m²/Sash]** |
| | 275 | 600 | 500 | 3000 | 1.5 |

[1] **End stop diagram 6L | 6R**: Surface max. **1.2 m²/Sash**

[2] Permitted gap between top/bottom slat and frame: 2 mm
Permitted inclination difference: 1 mm

* **bff max.** and **hff max.** are always dependent on each other.
Starting with certain widths/heights, vertical/horizontal friezes become necessary.

**In the event of a facade offset > 500 mm (e.g. for use on balconies and loggias), the system must be structurally inspected and tested in situ!**

Dimensions should always be viewed **from inside to outside**.

**bff** Finished sash width

**hff** Finished sash height

## Limit dimensions

### Fixed slats

| Illustration | Model | Frame profile | Slat profile | | |
|---|---|---|---|---|---|
| | R [2] | 70 x 30 | 60 x 6, with 2 reinforcement bars | | |
| | **Width min. (bff)** | **Width* max. (bff)** | **Hight min. (hff)** | **Hight* max. (hff)** | **Surface[1] max. [m²/Sash]** |
| | 275 | 600 | 500 | 3000 | 1.5 |

| Illustration | Model | Frame profile | Slat profile | | |
|---|---|---|---|---|---|
| | H Alu SLIM | 42 x 31 | 35 x 15<br>60 x 15 | | |
| | **Width min. (bff)** | **Width* max. (bff)** | **Hight min. (hff)** | **Hight* max. (hff)** | **Surface max. [m²/Sash]** |
| | 275 | 600 | 500 | 2500 | 1.2 |

| Illustration | Model | Frame profile | Slat profile | | |
|---|---|---|---|---|---|
| | H Wood SLIM | 42 x 31 | 60 x 15, Siberian larch, untreated | | |
| | **Width min. (bff)** | **Width* max. (bff)** | **Hight min. (hff)** | **Hight* max. (hff)** | **Surface max. [m²/Sash]** |
| | 275 | 600 | 500 | 2500 | 1.2 |

[1] **End stop diagram 6L | 6R**: Surface max. **1.2 m²/Sash**

[2] Permitted gap between top/bottom slat and frame: 2 mm
Permitted inclination difference: 1 mm

* **bff max.** and **hff max.** are always dependent on each other.
Starting with certain widths/heights, vertical/horizontal friezes become necessary.

**In the event of a facade offset > 500 mm (e.g. for use on balconies and loggias), the system must be structurally inspected and tested in situ!**

Dimensions should always be viewed **from inside to outside**.

**bff** Finished sash width

**hff** Finished sash height

## Limit dimensions

### Clothings

| Illustration | Model | Frame profile | Fabric Soltis | | |
|---|---|---|---|---|---|
| | Soltis | 70 x 30 | 92<br>86 | | |
| | **Width min. (bff)** | **Width* max. (bff)** | **Hight min. (hff)** | **Hight* max. (hff)** | **Surface[1] max. [m²/Sash]** |
| | 300 | 600 | 500 | 2500 | 1.3 |

### Closed models

| Illustration | Model | Frame profile | Filling | | |
|---|---|---|---|---|---|
| | S | SYS 70 x 30 | 2 mm aluminum sheet | | |
| | **Width min. (bff)** | **Width* max. (bff)** | **Hight min. (hff)** | **Hight* max. (hff)** | **Surface[1] max. [m²/Sash]** |
| | 250 | 600 | 500 | 3000 | 1.5 |

| Illustration | Model | Frame profile | Filling | | |
|---|---|---|---|---|---|
| | S SLIM | 40 x 31 | 2 mm aluminum sheet | | |
| | **Width min. (bff)** | **Width* max. (bff)** | **Hight min. (hff)** | **Hight* max. (hff)** | **Surface[1] max. [m²/Sash]** |
| | 250 | 600 | 500 | 3000 | 1.5 |

[1] **End stop diagram 6L | 6R**: Surface max. **1.2 m²/Sash**

* **bff max.** and **hff max.** are always dependent on each other.
Starting with certain widths/heights, vertical/horizontal friezes become necessary.

**In the event of a facade offset > 500 mm (e.g. for use on balconies and loggias), the system must be structurally inspected and tested in situ!**

Dimensions should always be viewed **from inside to outside**.

**bff** Finished sash width

**hff** Finished sash height

## Limit dimensions

### Closed models

| Illustration | Model | Frame profile | Filling | | |
|---|---|---|---|---|---|
| | SL | SYS 70 x 30 | 2 mm aluminum sheet, perforated<br>Standard perforations: Q 20 x 20, Q 35 x 35, RU 20, RU 30<br>Distance between hole edges: ≥ 20 | | |
| | **Width min. (bff)** | **Width* max. (bff)** | **Hight min. (hff)** | **Hight* max. (hff)** | **Surface[1] max. [m²/Sash]** |
| | 250 | 600 | 500 | 3000 | 1.5 |

| Illustration | Model | Frame profile | Filling | | |
|---|---|---|---|---|---|
| | SL SLIM | 40 x 31 | 2 mm aluminum sheet, perforated<br>Standard perforations: Q 20 x 20, Q 35 x 35, RU 20, RU 30<br>Distance between hole edges: ≥ 20 | | |
| | **Width min. (bff)** | **Width* max. (bff)** | **Hight min. (hff)** | **Hight* max. (hff)** | **Surface[1] max. [m²/Sash]** |
| | 250 | 600 | 500 | 3000 | 1.5 |

| Illustration | Model | Frame profile | Filling | | |
|---|---|---|---|---|---|
| | Sentum SLIM | 42 x 31 | 2 mm aluminum expanded metal<br>Mesh according to choice (optional) | | |
| | **Width min. (bff)** | **Width* max. (bff)** | **Hight min. (hff)** | **Hight* max. (hff)** | **Surface max. [m²/Sash]** |
| | 250 | 600 | 500 | 2500 | 1.2 |

| Illustration | Model | Frame profile | Filling | | |
|---|---|---|---|---|---|
| | Platina SLIM | 42 x 31 | 8 mm Fundermax Uni-Decor plate | | |
| | **Width min. (bff)** | **Width* max. (bff)** | **Hight min. (hff)** | **Hight* max. (hff)** | **Surface[1] max. [m²/Sash]** |
| | 250 | 600 | 500 | 3000 | 1.5 |

[1] **End stop diagram 6L | 6R**: Surface max. **1.2 m²/Sash**

* **bff max.** and **hff max.** are always dependent on each other.
Starting with certain widths/heights, vertical/horizontal friezes become necessary.

**In the event of a facade offset > 500 mm (e.g. for use on balconies and loggias), the system must be structurally inspected and tested in situ!**

Dimensions should always be viewed **from inside to outside**.

## Installation situations at top

### Vertical section: Wall mounting (WM)

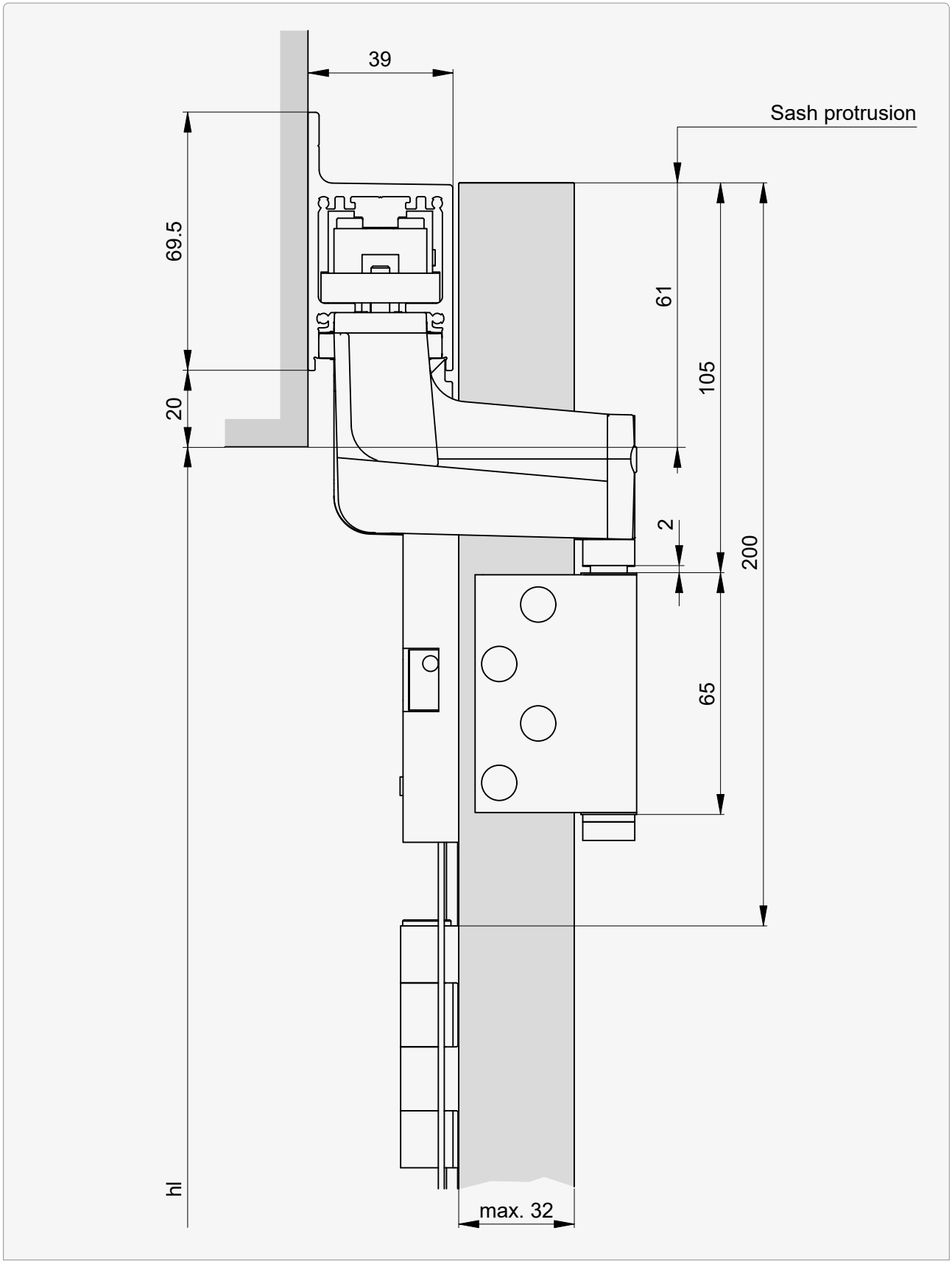

## Installation situations at top

### Vertical section: Ceiling installation (DM)

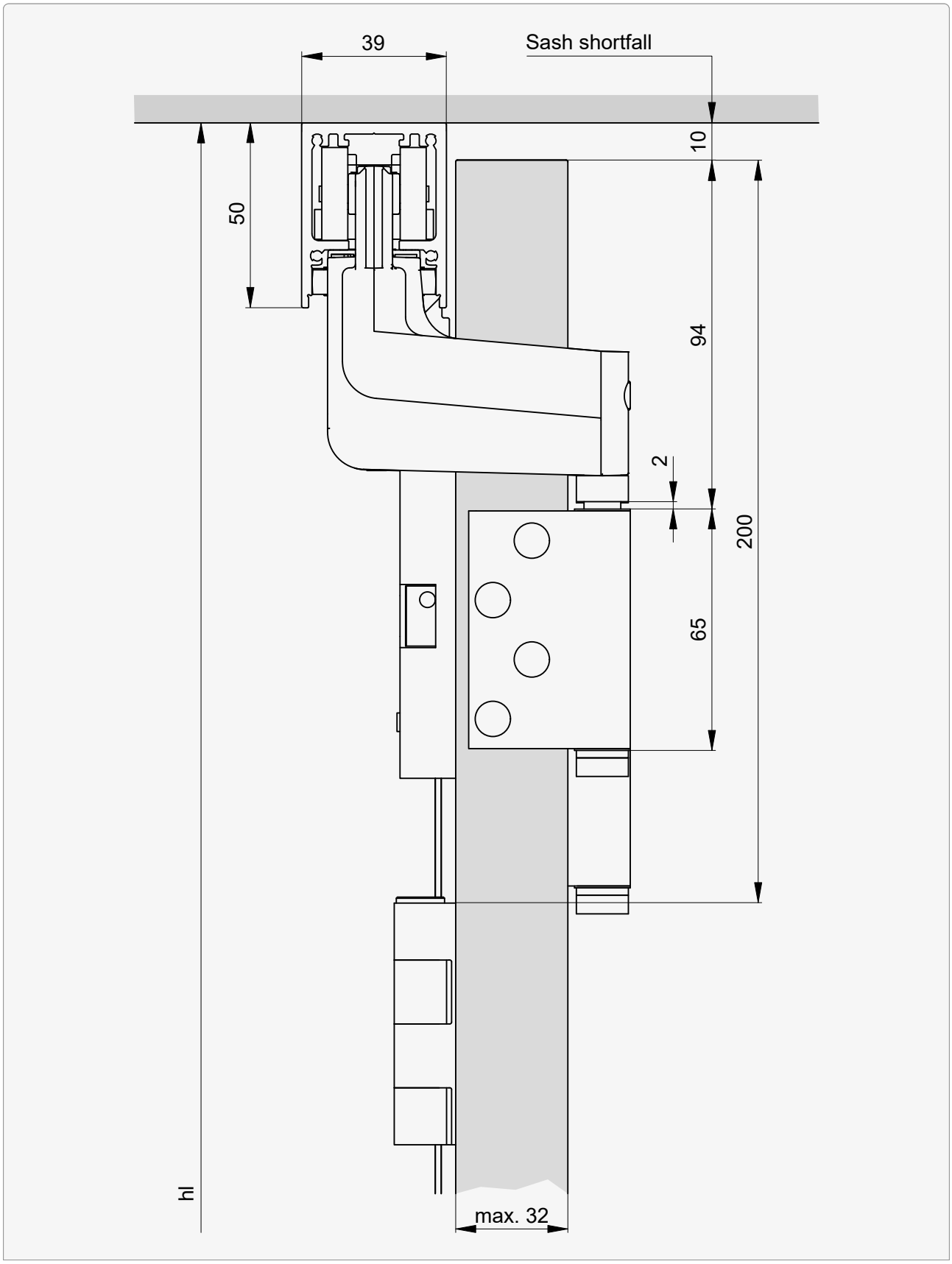

## Installation situations at bottom

### Vertical section: S1 bottom wall mounting

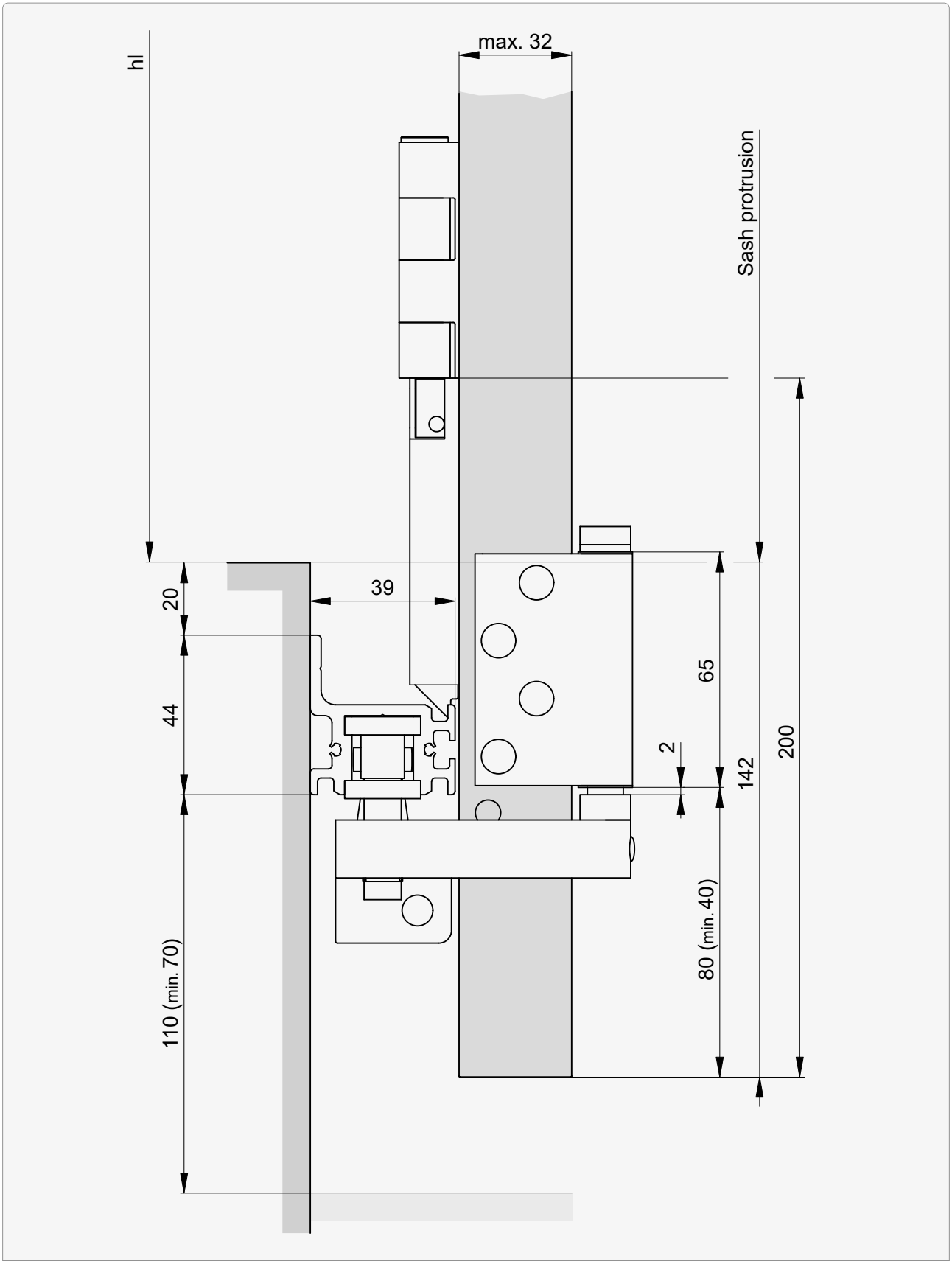

## Installation situations at bottom

### Vertical section: S2 bottom floor mounting

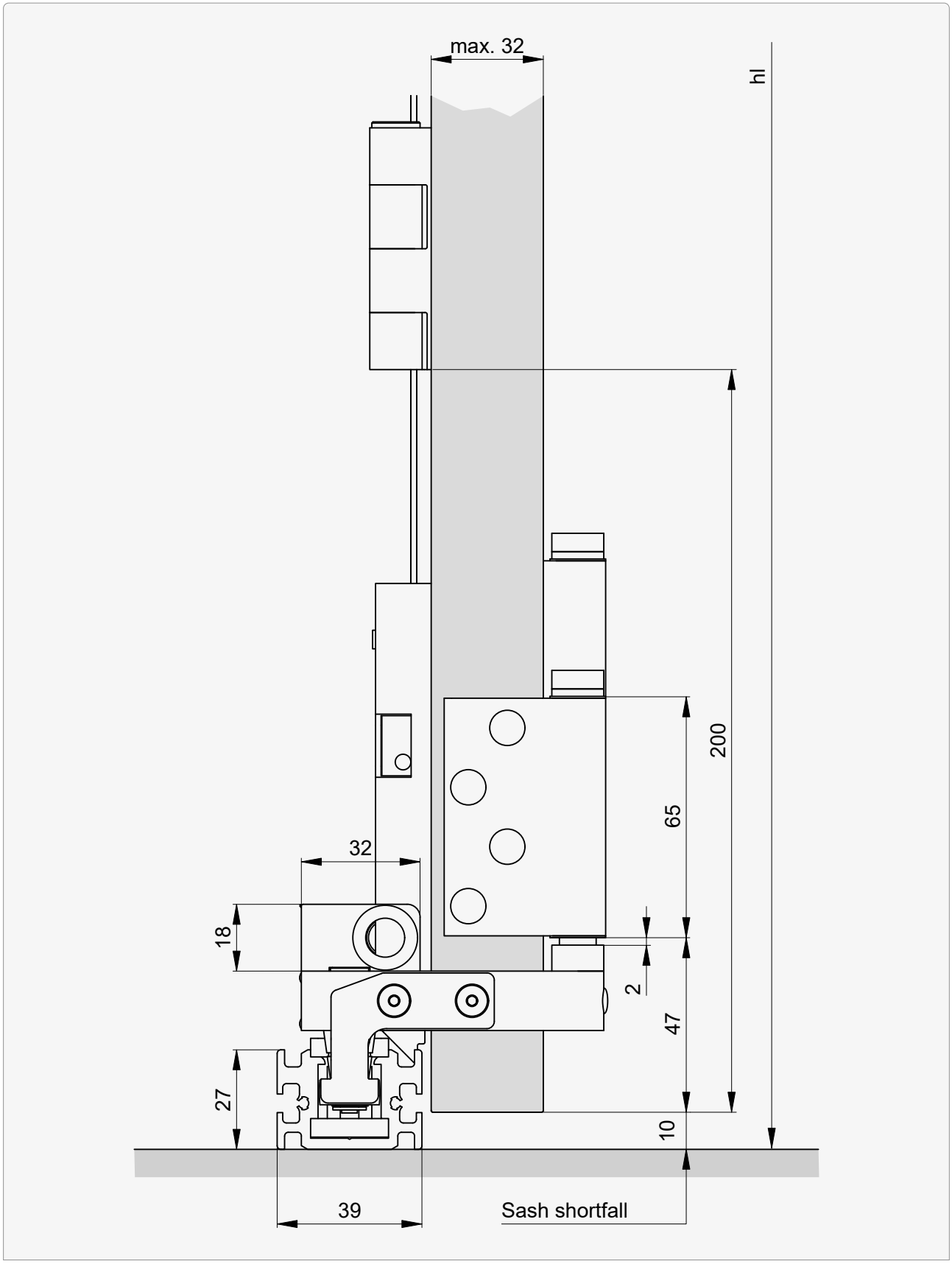

## Runner rails

### Type G | Ceiling installation

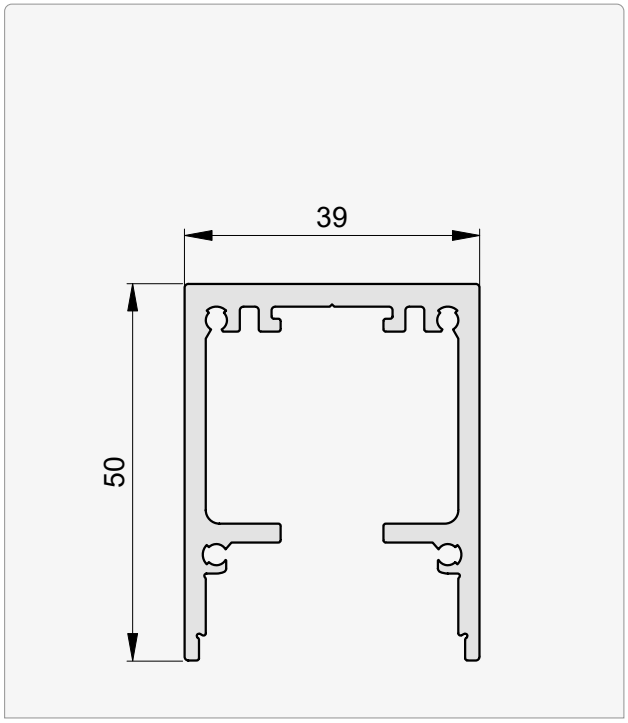


### Type G | Wall mounting

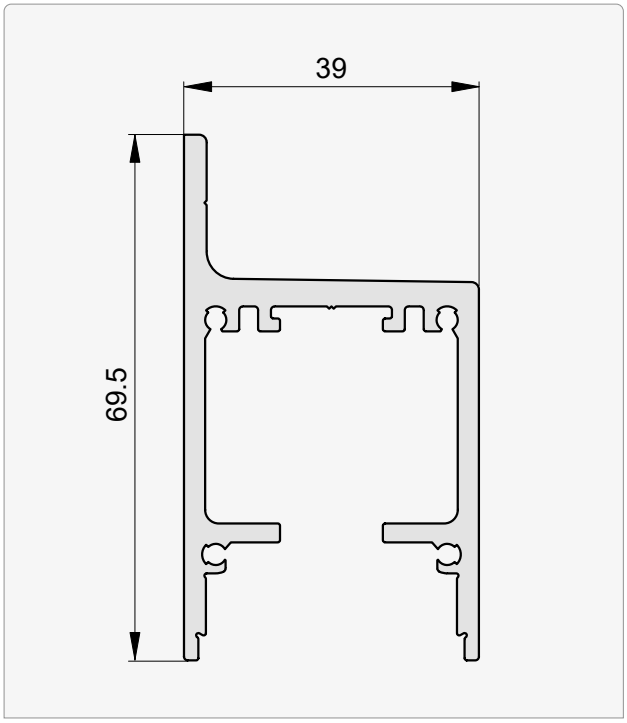


## Guide rails

### Type G | Bottom installation

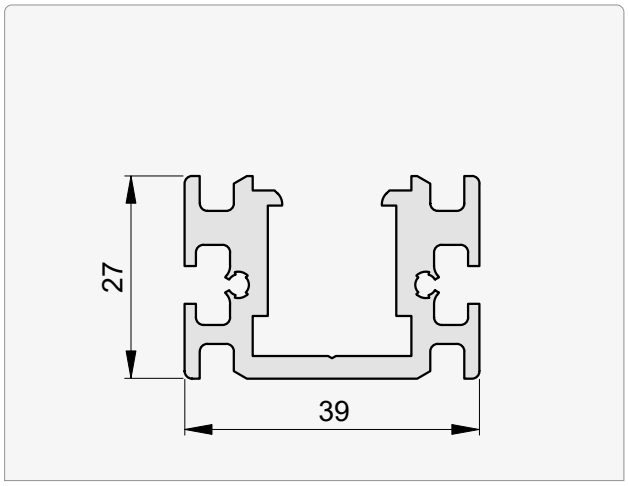


### Type G | Wall mounting

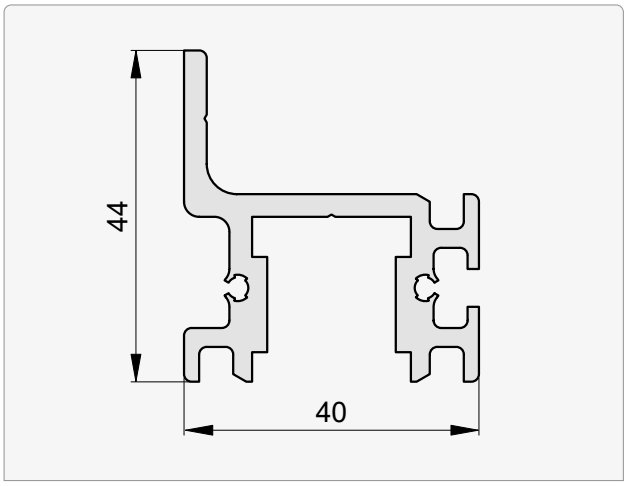

## End stop diagrams

Standard execution with an **even number of sashes**.

### Scheme 2L | 2R

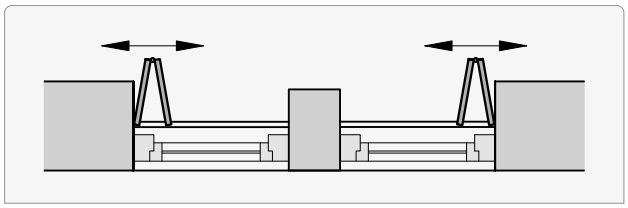

### Scheme 4

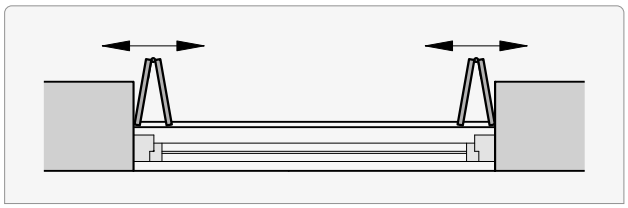

### Scheme 4L | 4R

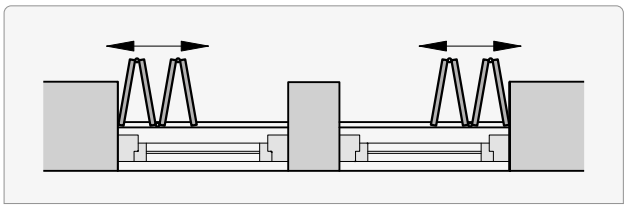

### Scheme 6L | 6R

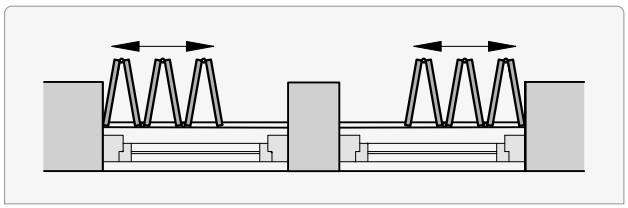

### Scheme 8

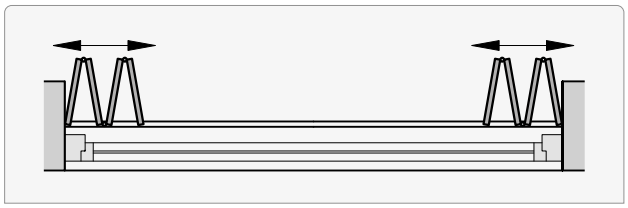

Limit dimensions ..... 62

## Design examples

### No sash projection | with stop buffer

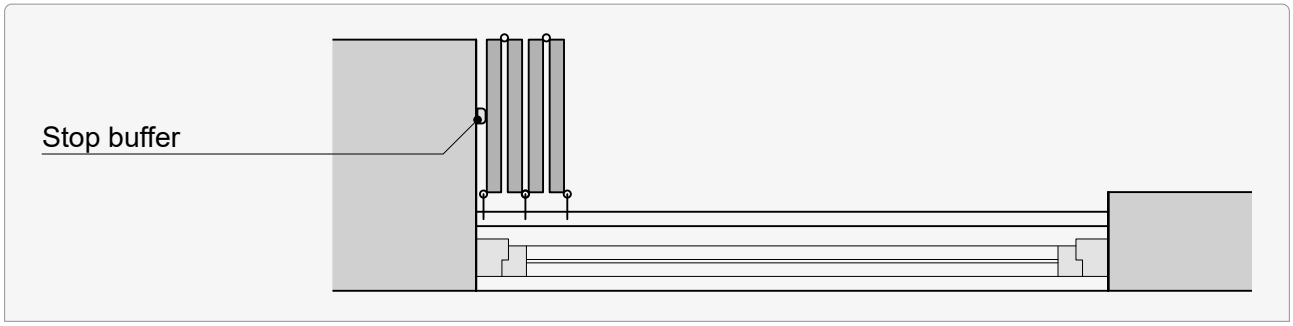


### Sash projection ≤ 1/3 of the soffit depth | with stop buffer

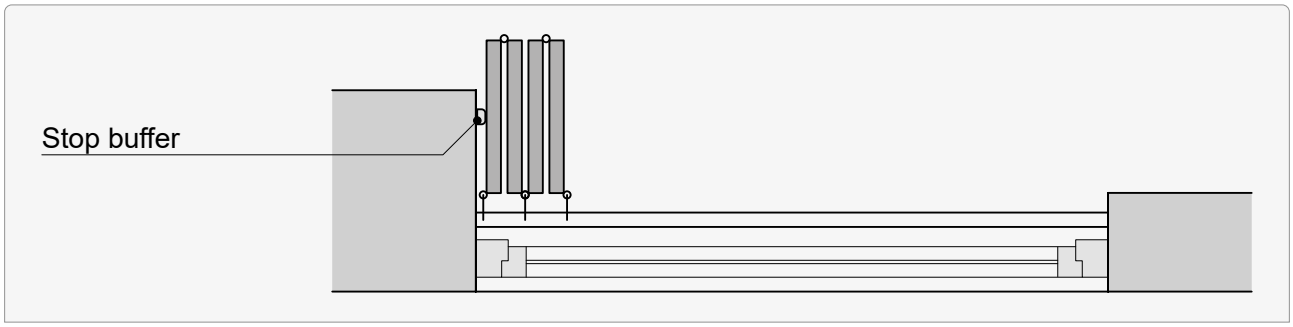

## Frieze

### Horizontal frieze

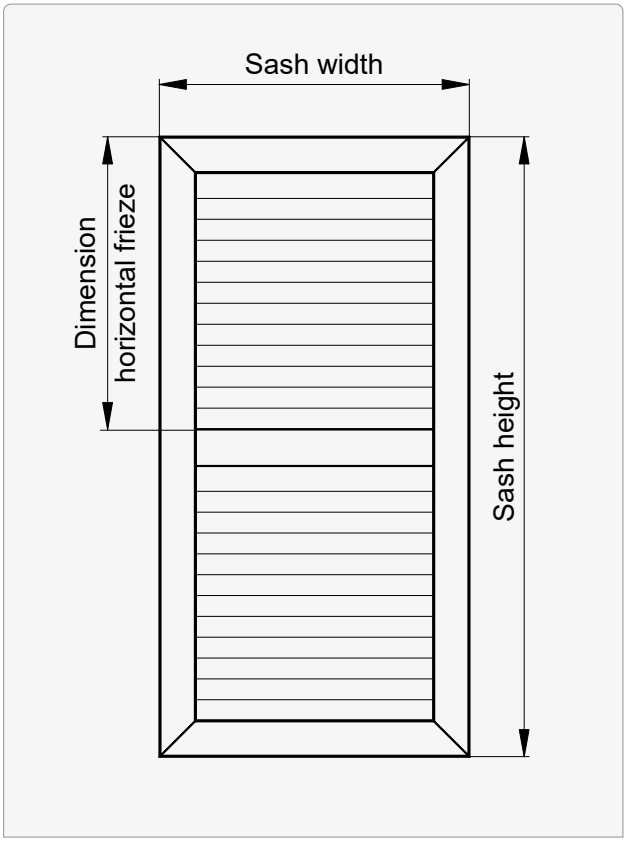


| Horizontal frieze dimension min. |
|---|
| 300 |

## Pull latches

### Type G | Round

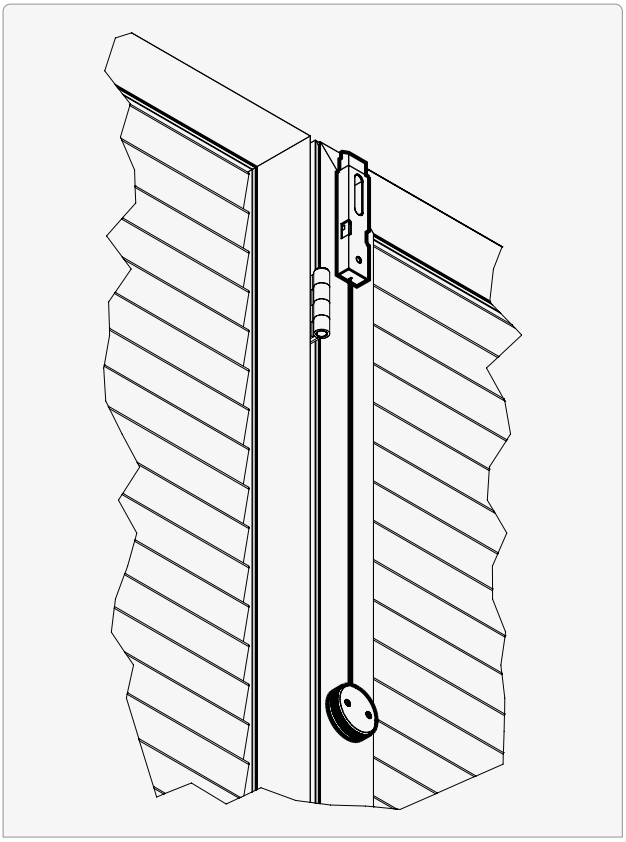

## Integrated overwinding protection

Each sash is **individually secured** against overwinding **with an integrated overwinding protection.**

### Wall mounting (WM)

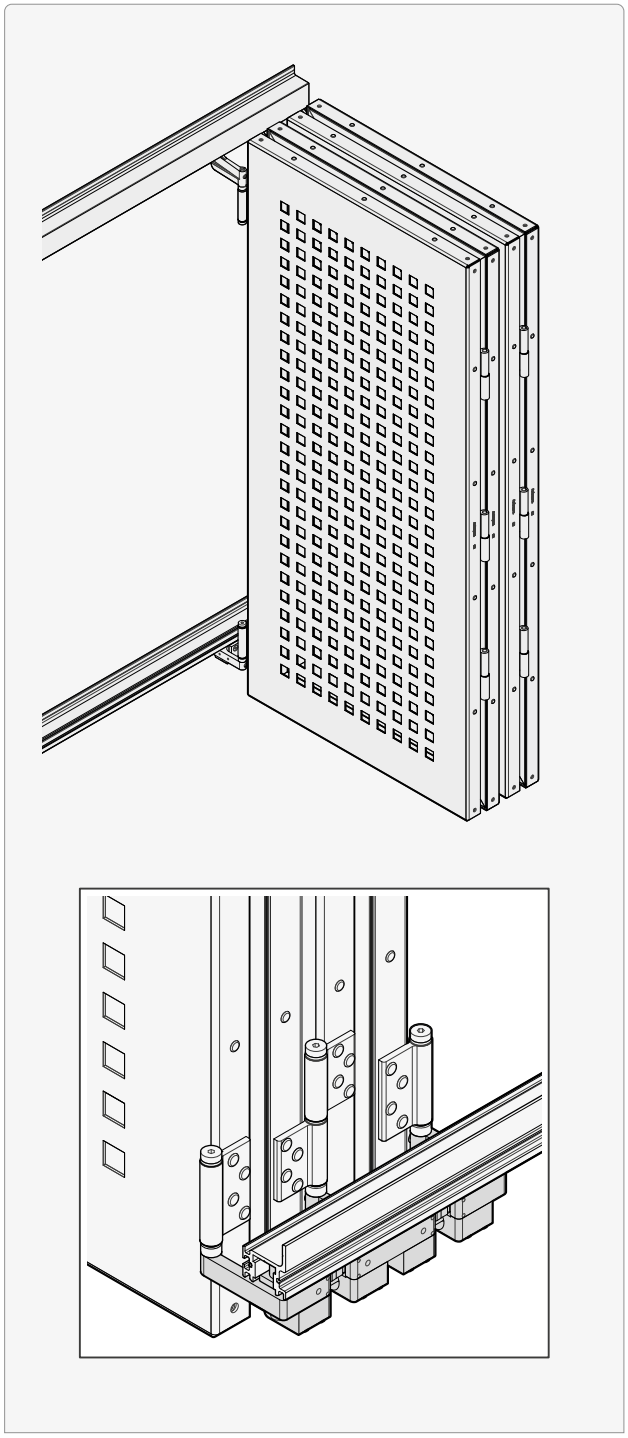

### Ceiling installation (DM)

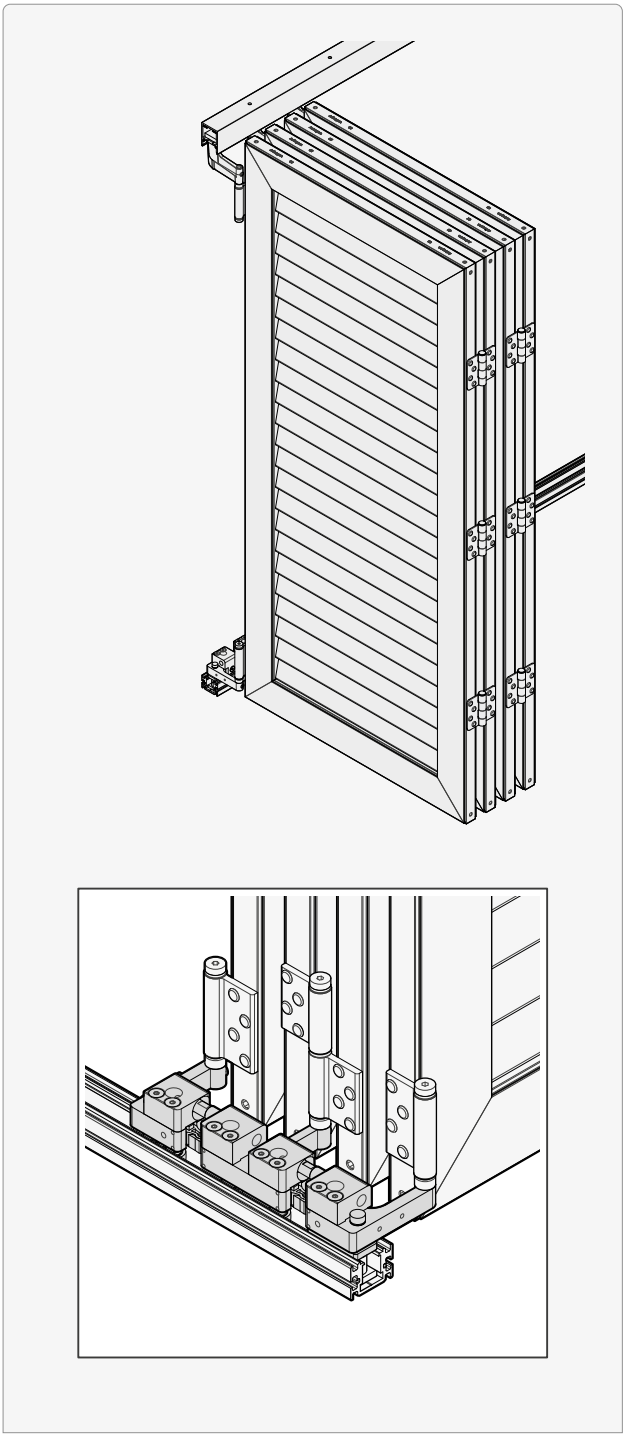

Design examples..... 72

# Wing shutter with window frame


| | |
|---|---|
| Limit dimensions window (soffit headroom sizes) | **78** |
| Mounting situation | **79** |
| Sash types | **80** |
| Pre-drilled holes | **83** |
| Sections \| Details | **84** |
| End stop diagrams | **86** |
| Dimensions | **88** |
| Retention elements | **89** |
| Lockers | **91** |

## Limit dimensions window (soffit headroom sizes)

| Version | Width min. (B) | Width max. (B) | Height min. (Al) | Height max. (Al) |
|---|---|---|---|---|
| 1 sash | 300 | 1000 | 800 | 2500 |
| 2 sashes | 600 | 2000 | | |
| 3 sashes | 900 | 2500 | | |
| 4 sashes | 1100 | 3000 | | |

**In the event of a facade offset > 500 mm (e.g. for use on balconies and loggias), the system must be structurally inspected and tested in situ!**

Dimensions should always be viewed **from inside to outside**.

## Mounting situation

### Vertical section

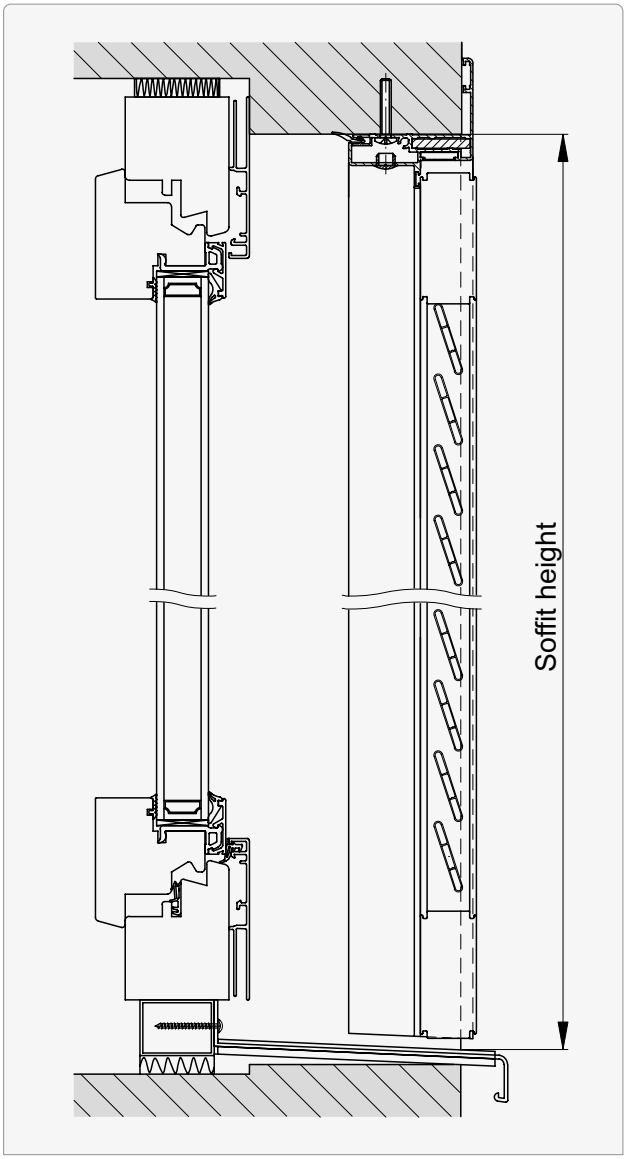


### Horizontal section

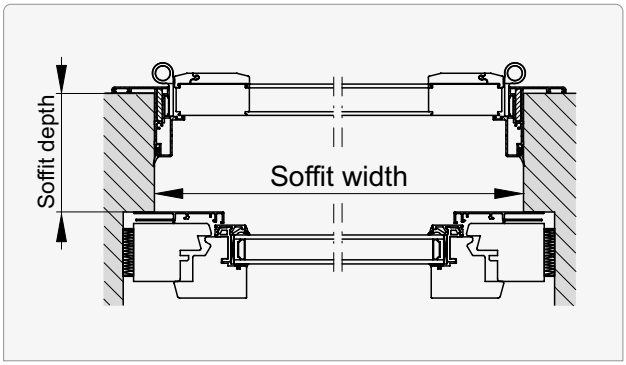


Sections | Details ..... 84

## Sash types

### Fixed slats

A EZ R T

Model A

Model EZ

Model R

Model T

## Sash types

### Movable slats

B E

Model B

Model E (Heritage Home)

## Sash types

### Closed models

C CH F G ISO

Model C

Model CH

Model F

Model G ISO

## Pre-drilled holes

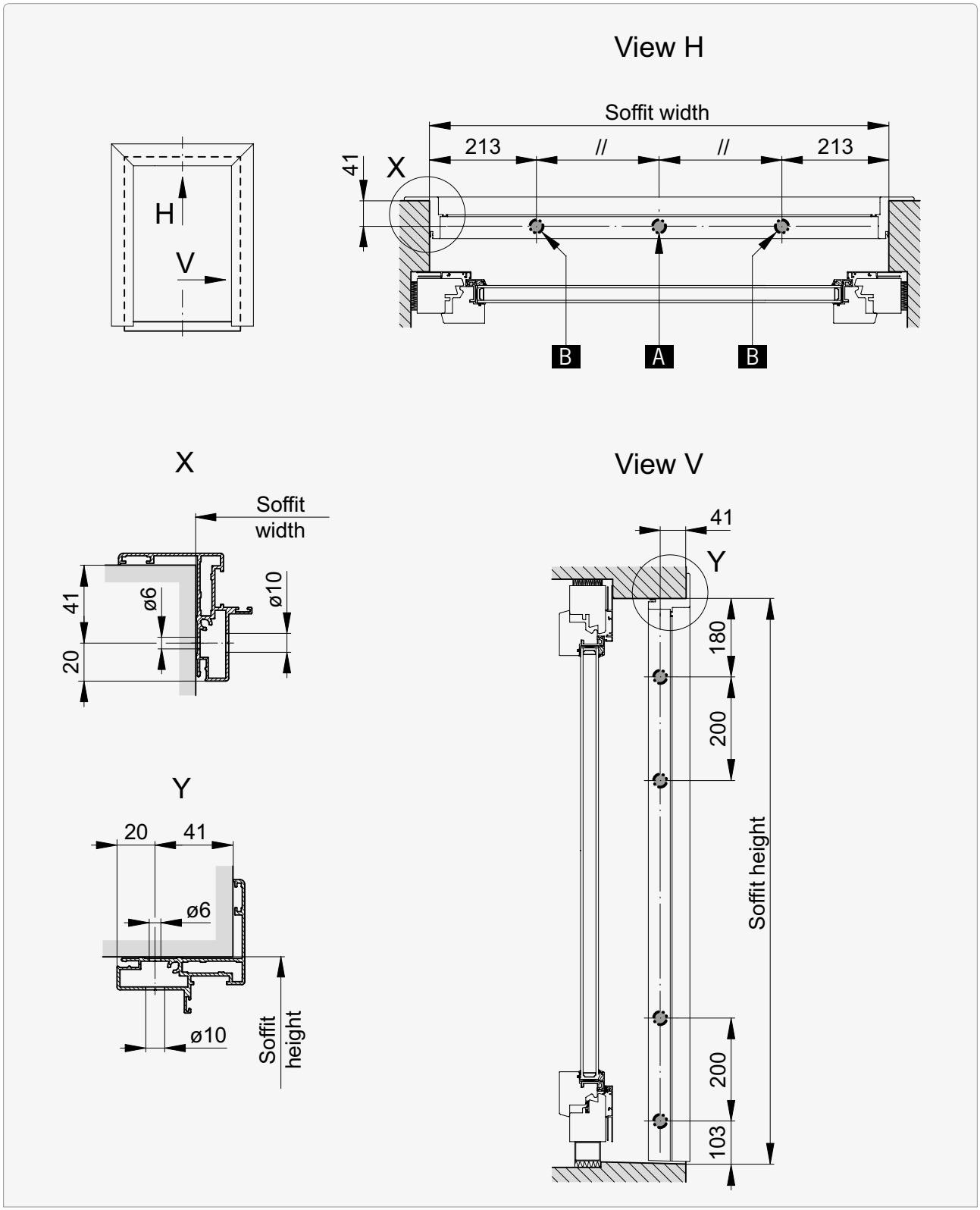


| Soffit width | Holes |
|---|---|
| < 1800 | A |
| 1800 – 3000 | A + B |

## Sections | Details

### Horizontal section

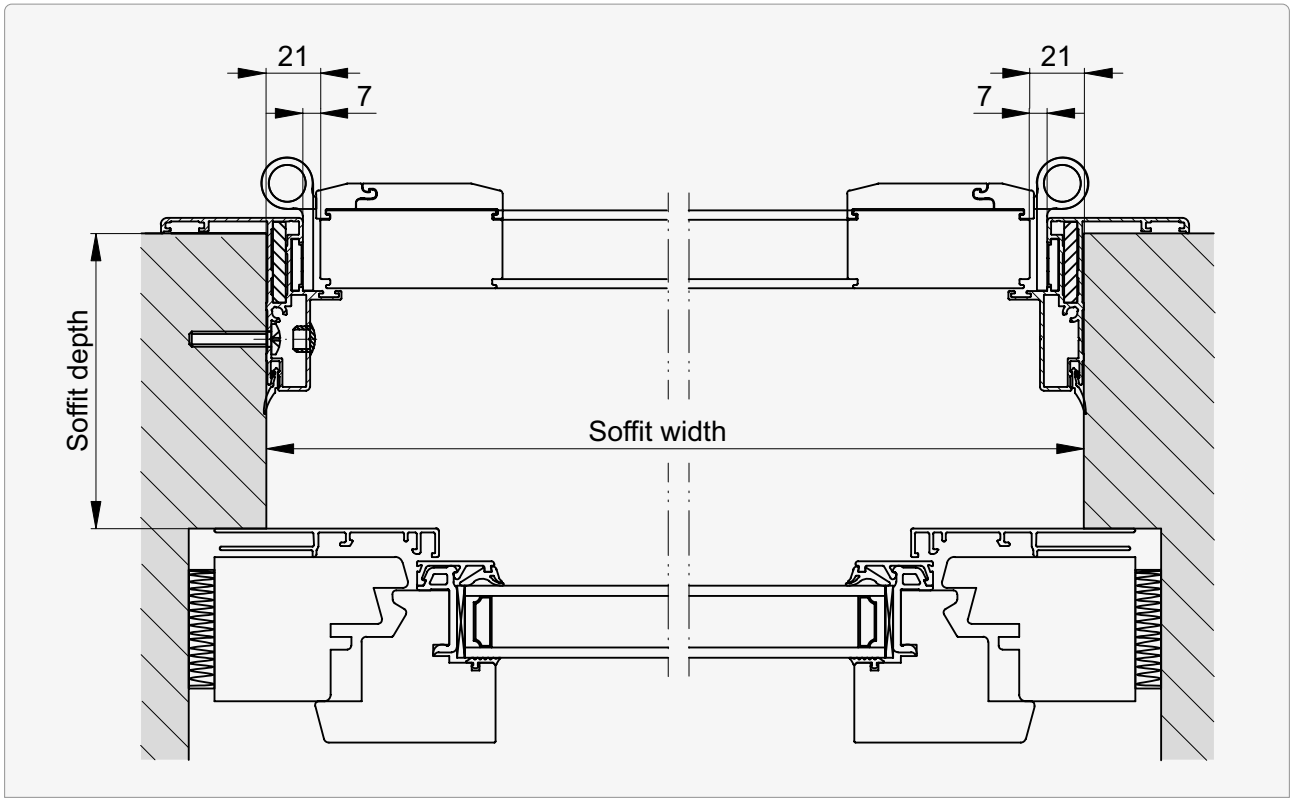


### Detail: Horizontal section of window frame

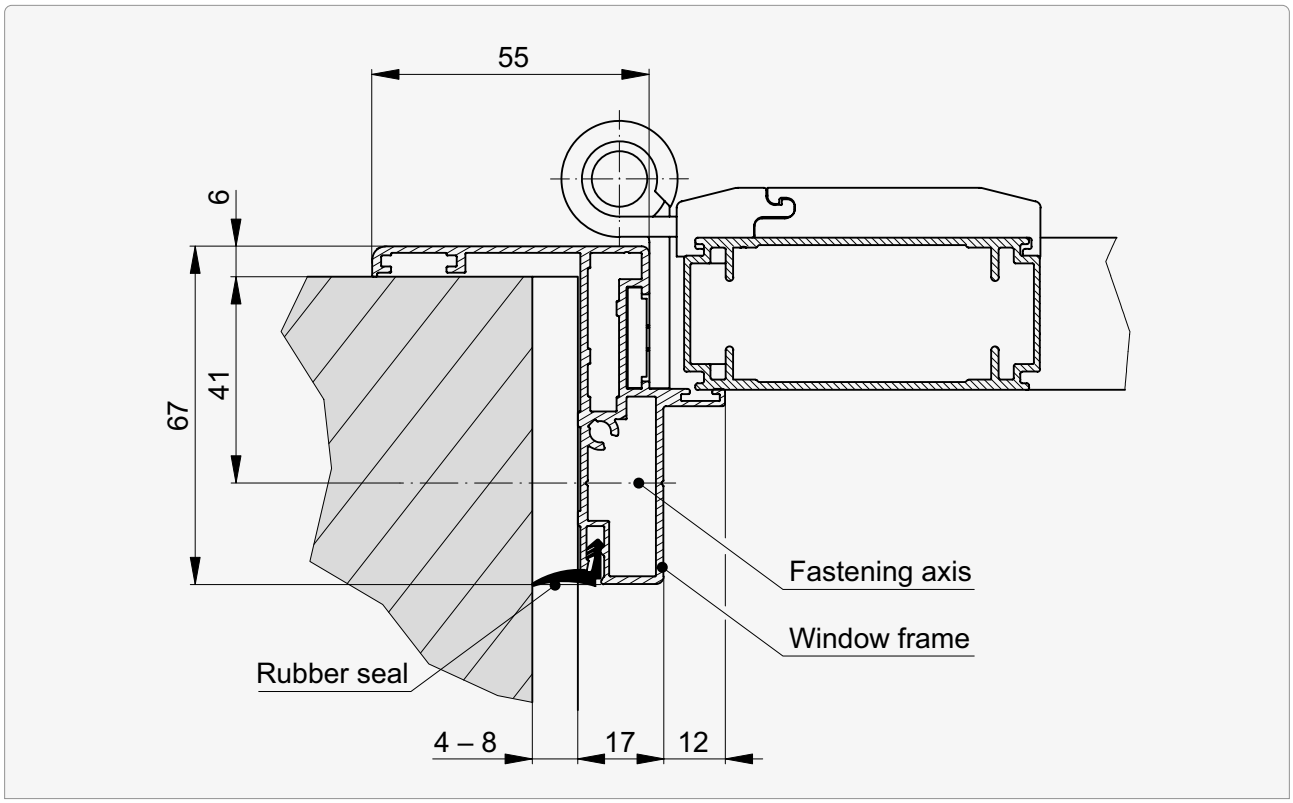

## Sections | Details

### Detail for bottom: Window frame beveling

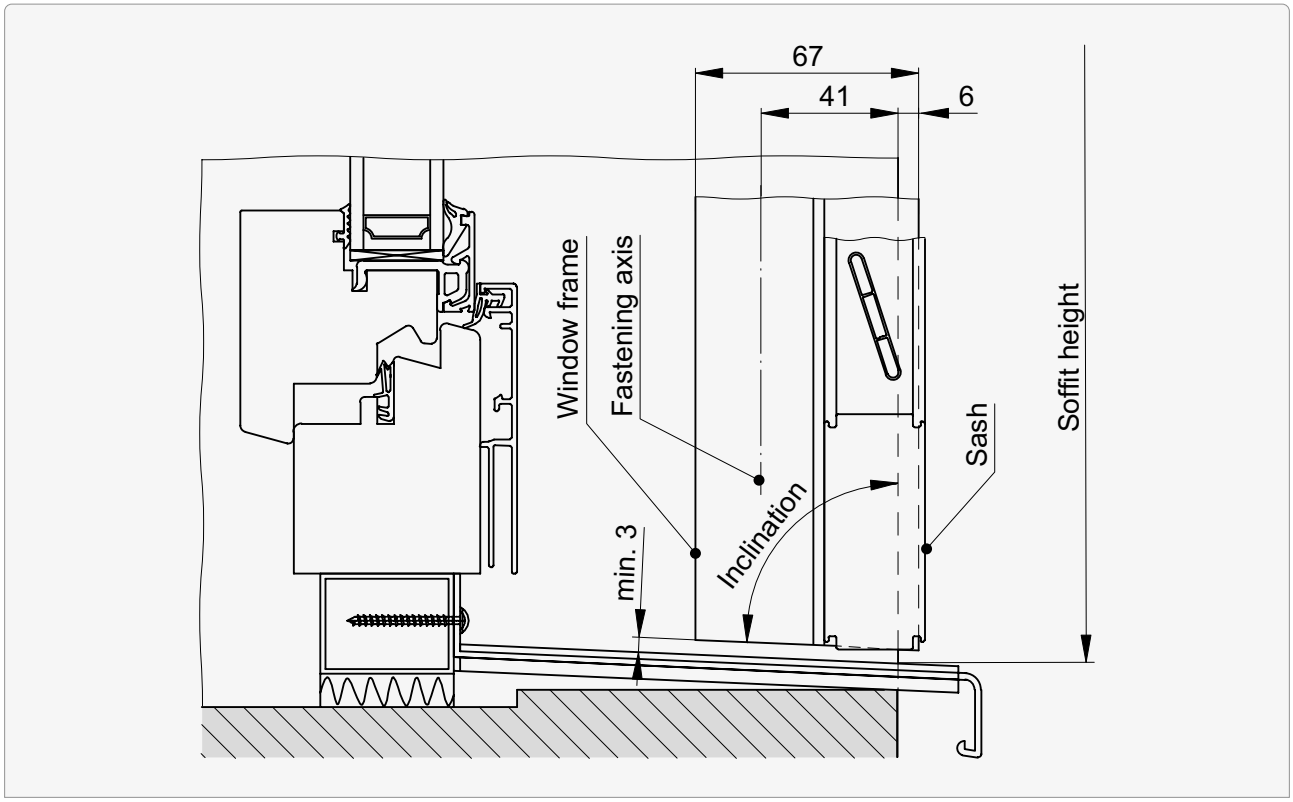

## End stop diagrams

### Scheme 1L

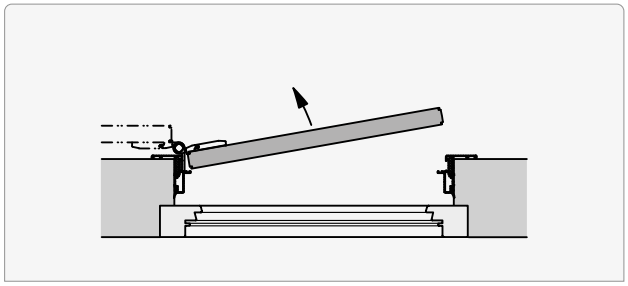

### Scheme 1R

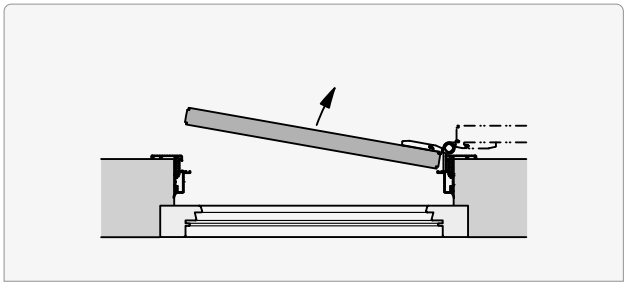

### Scheme 2

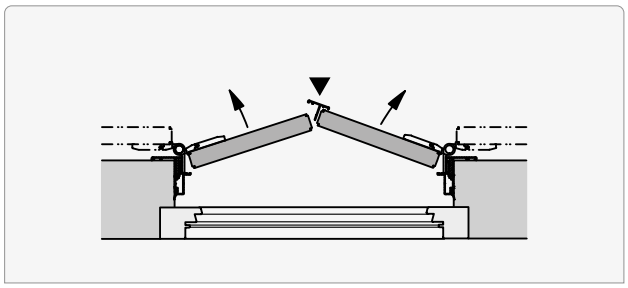

### Scheme 2S

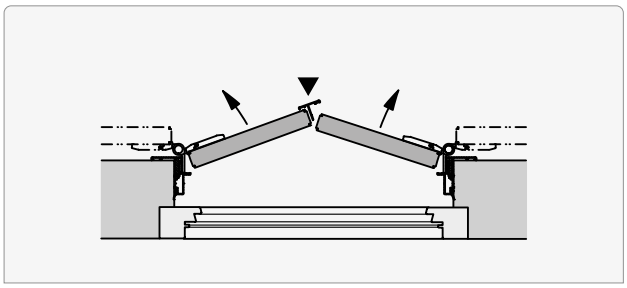

### Scheme 2L

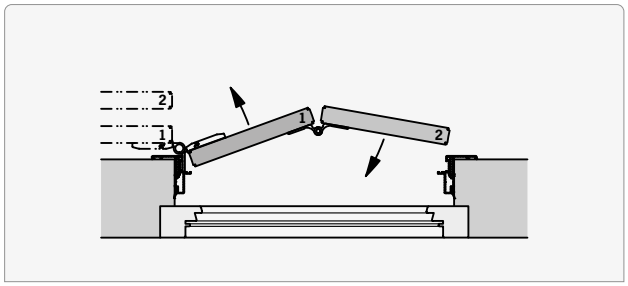


### Scheme 2R

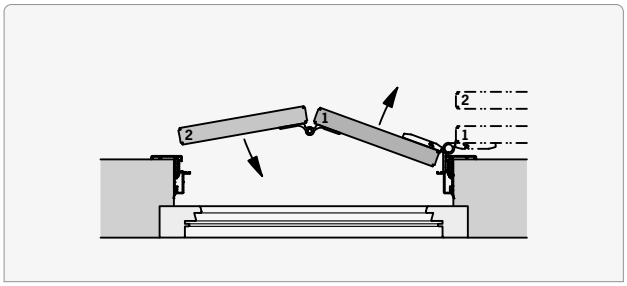


### Scheme 2LA

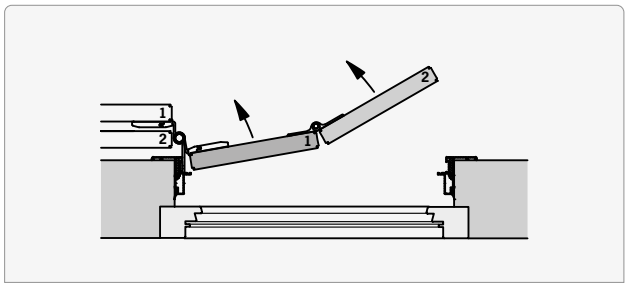


### Scheme 2RA

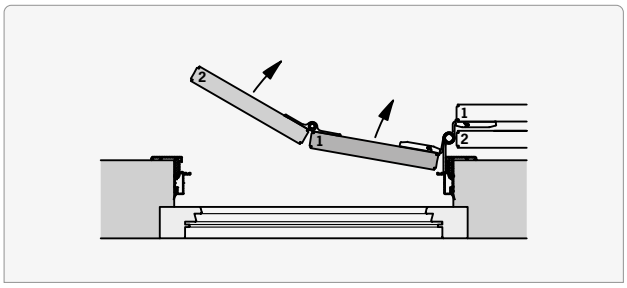


▼ Baffle plate

Limit dimensions ..... 78

## End stop diagrams

### Scheme 3L

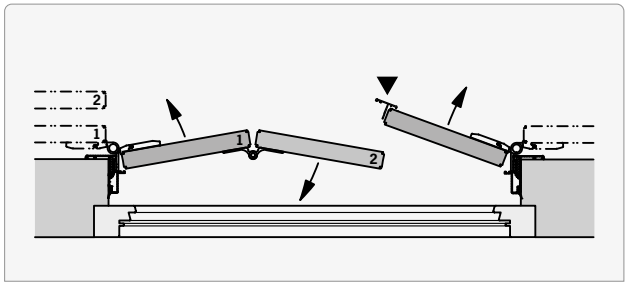

### Scheme 3R

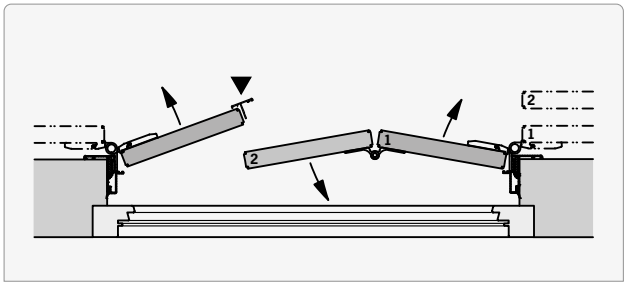

### Scheme 3LA

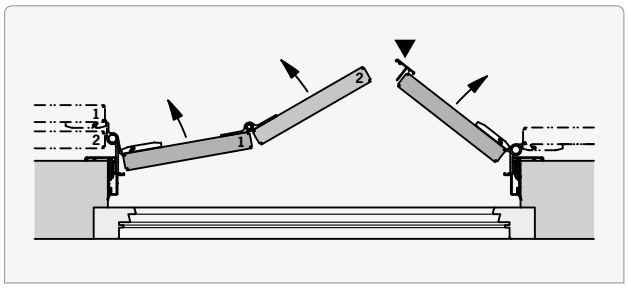

### Scheme 3RA

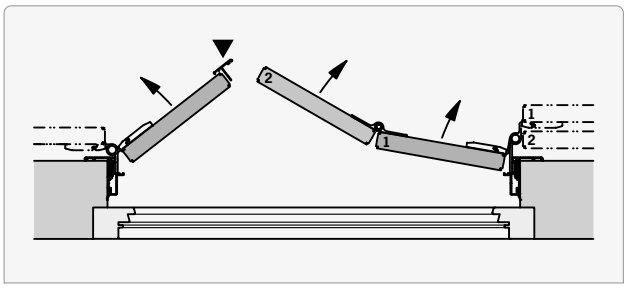

### Scheme 4

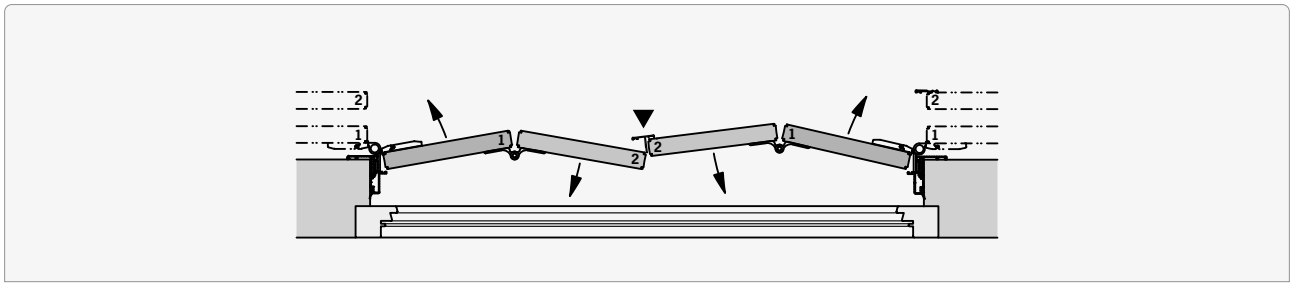

### Baffle plate

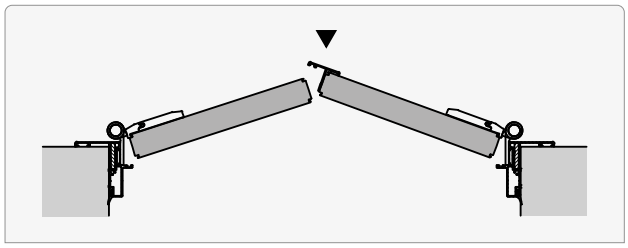

right

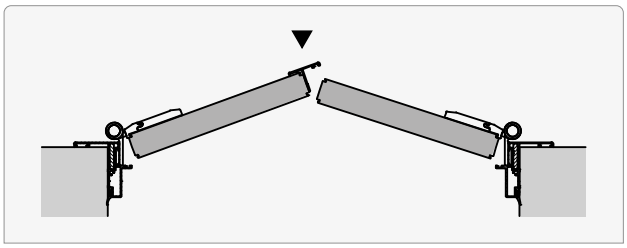

left

▼ Baffle plate

Limit dimensions ..... 78

## Dimensions

### Horizontal frieze

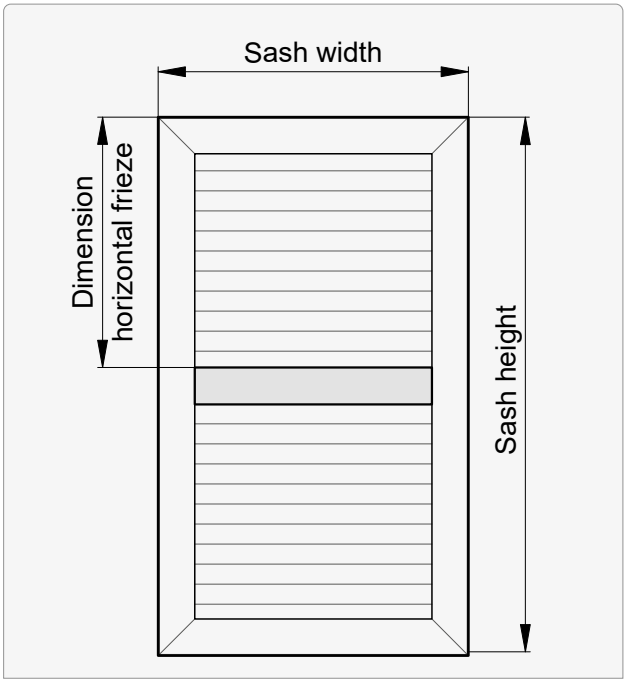


### Tubtara rivet

**Adjustment lever** B

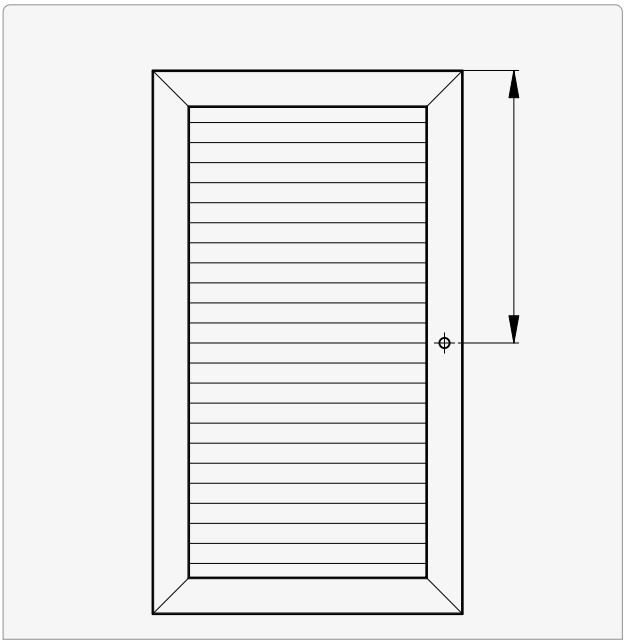

| Horizontal frieze dimension min. |
|---|
| 300 |

### Bar at top and bottom

F G ISO

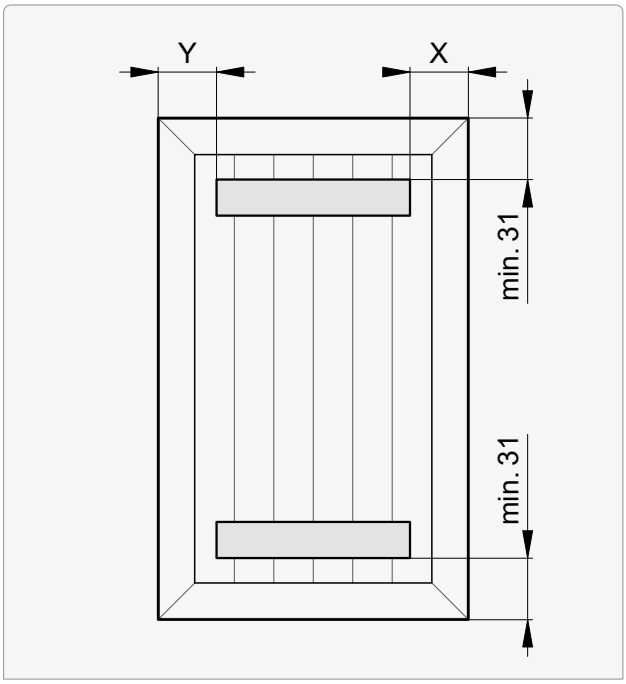


| x | y |
|---|---|
| 60 (Standard) | 60 (Standard) |

### Bar z-shaped

F G ISO

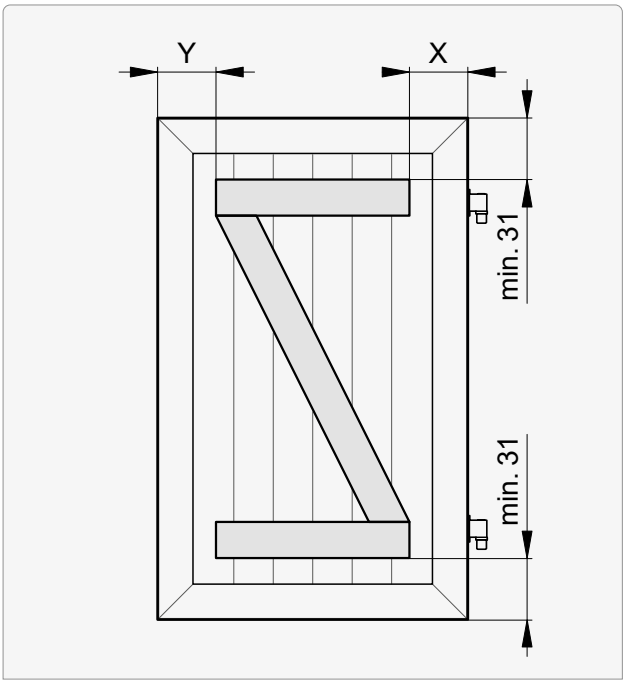


| x | y |
|---|---|
| | |

## Retention elements

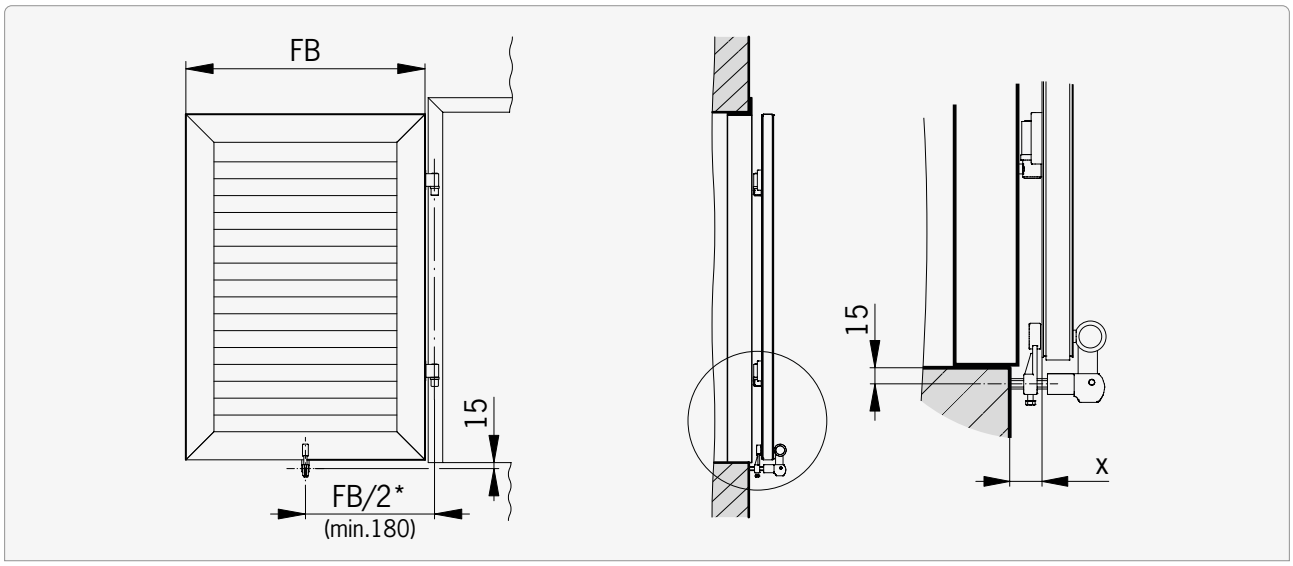


**FB** Sash width

### Shutter holder

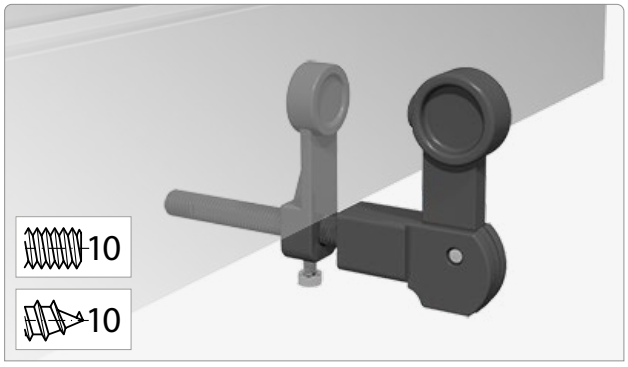


| X |
|---|
| 25 |

### Lady's head

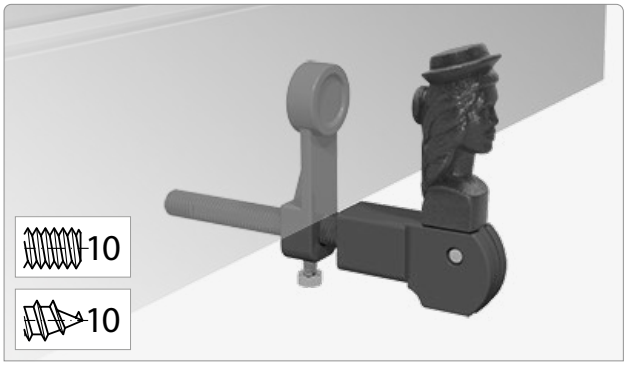


| X |
|---|
| 25 |

### Shutter latch

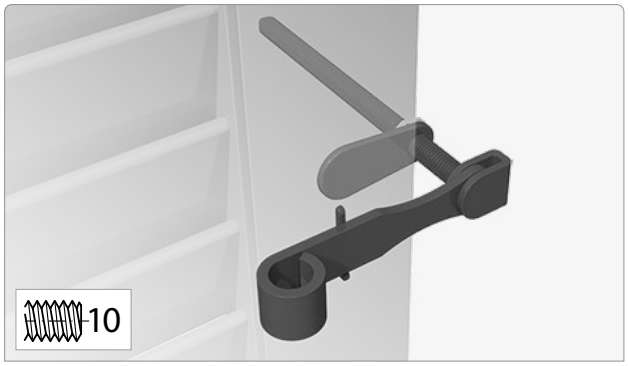


| X |
|---|
| 25 |

### Shutter latch Marseille

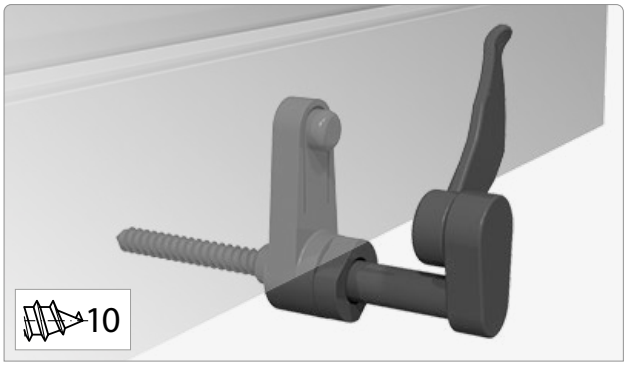


| X |
|---|
| 25 |

## Retention elements

### Door casement holder

| X |
|---|
| 30* |

* with fitting carrier: 35

### Convenience casement holder

**Type 2 | Option window**

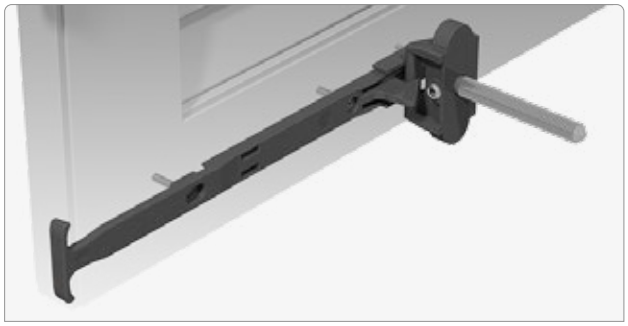

| X |
|---|
| 35 |

**Type 3 | Standard door**

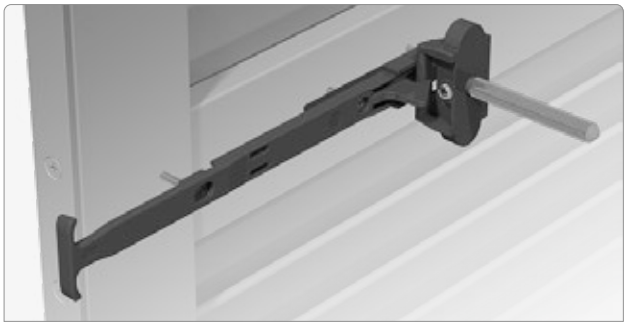

| X |
|---|
| 35 |

## Lockers

### Snap lock

### Rod lock 2F

### Espagnolette round

# Wing shutter with installation frame


| | |
|---|---|
| Limit dimensions window (soffit headroom sizes) | **94** |
| Mounting situations \| 3-sided frame | **95** |
| Mounting situations \| 4-sided frame | **97** |
| Sash types | **99** |
| Pre-drilled holes | **102** |

**3-sided frame**

| | |
|---|---|
| Sections \| Details | **106** |

**4-sided frame**

| | |
|---|---|
| Sections \| Details | **112** |
| End stop diagrams | **120** |
| Dimensions | **122** |
| Retention elements | **123** |
| Lockers | **126** |

## Limit dimensions window (soffit headroom sizes)

| Version | Width min. (B) | Width max. (B) | Height min. (Al) | Height max. (Al) |
|---|---|---|---|---|
| 1 sash | 400 | 1000 | 800 | 2500 |
| 2 sashes | 600 | 2000 1800[1] | | 2200[1] |
| 3 sashes | 900 | 2500 1800[1] | | |
| 4 sashes | 1100 | 3000 1800[1] | | |

[1] With insect screen

**In the event of a facade offset > 500 mm (e.g. for use on balconies and loggias), the system must be structurally inspected and tested in situ!**

Dimensions should always be viewed **from inside to outside**.

## Mounting situations | 3-sided frame

### Vertical section: Installation frame 40 x 31

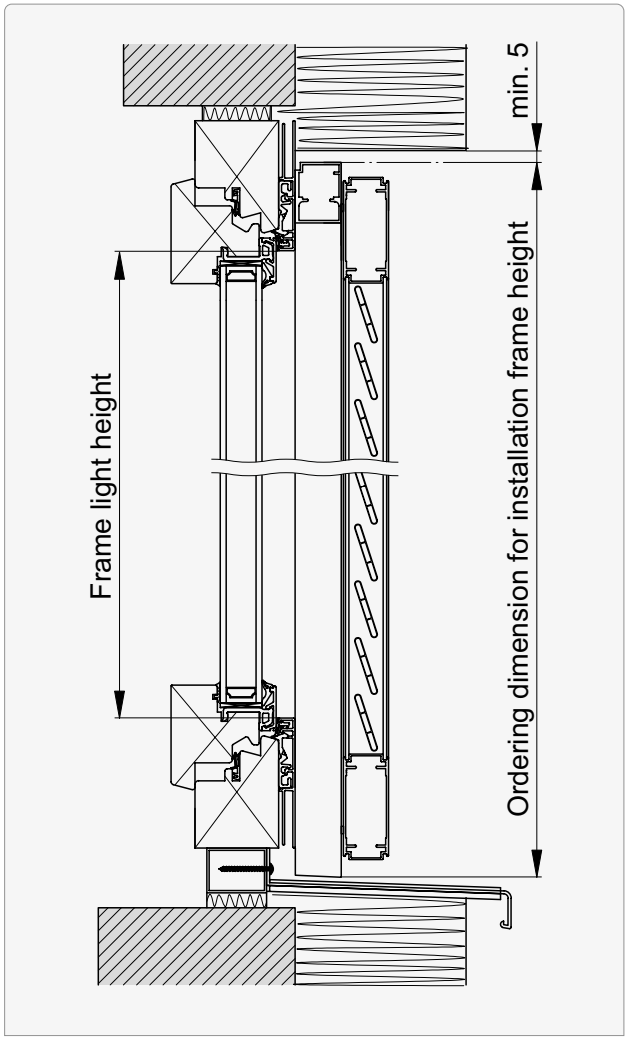


### Vertical section: Installation frame 40 x 50

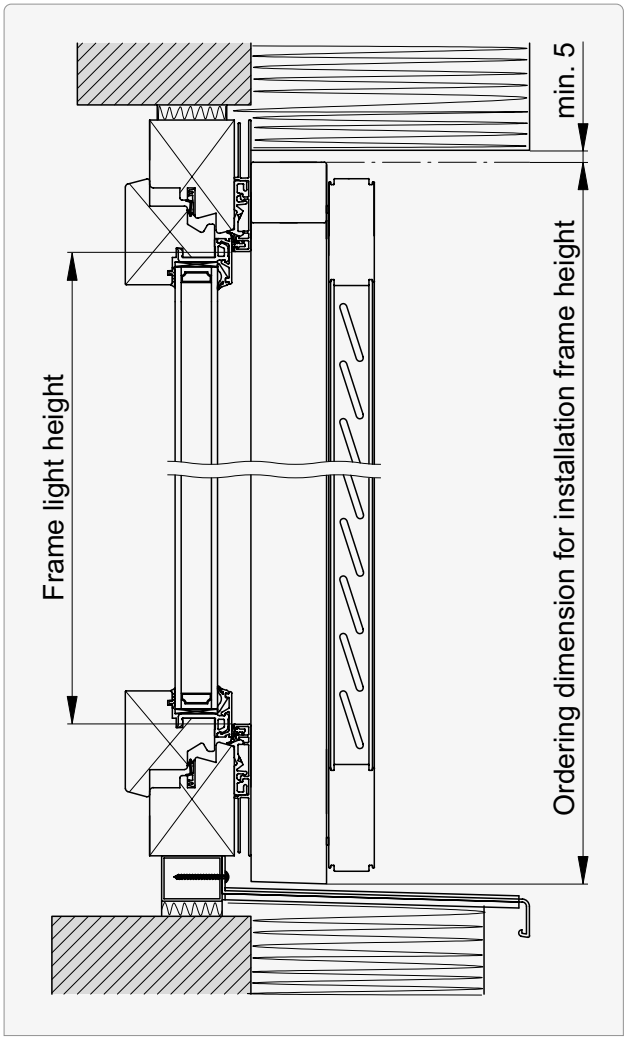


### Horizontal section: Installation frame 40 x 31

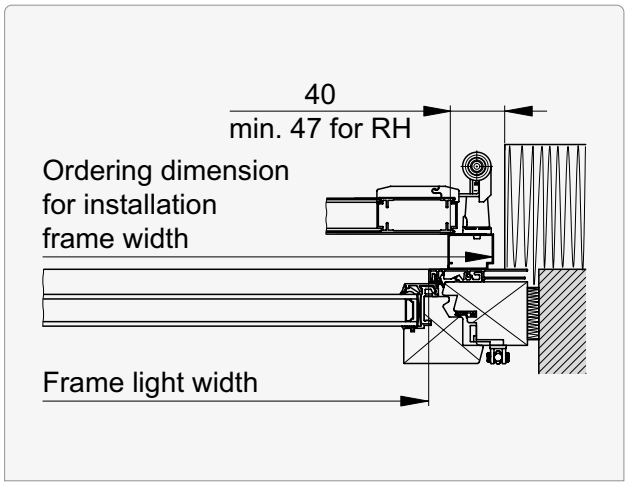


### Horizontal section: Installation frame 40 x 50

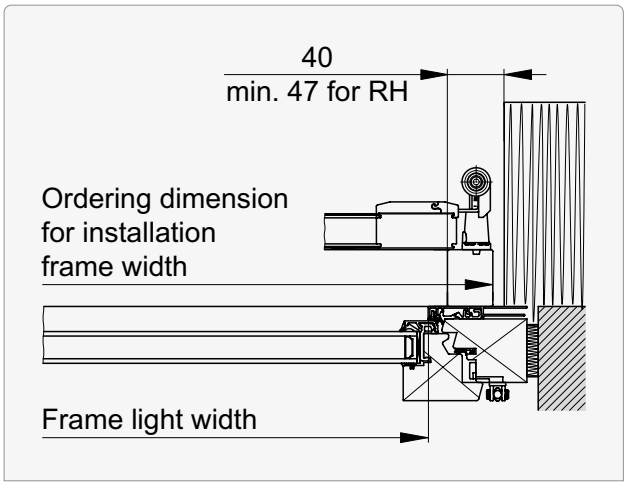


Sections | Details ..... 106

## Mounting situations | 3-sided frame

### Vertical section: Installation frame 40 x 120

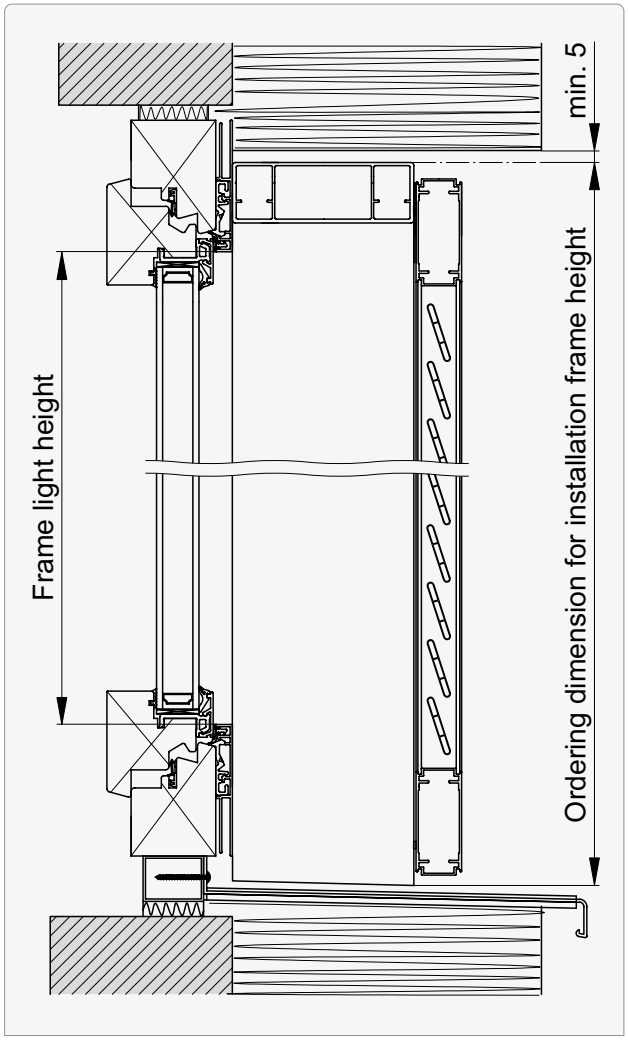


### Horizontal section: Installation frame 40 x 120

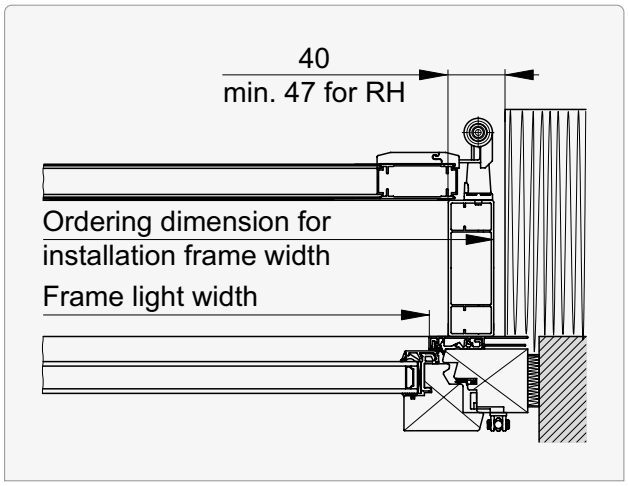


Sections | Details ..... 106

## Mounting situations | 4-sided frame

### Vertical section: Installation frame 40 x 31

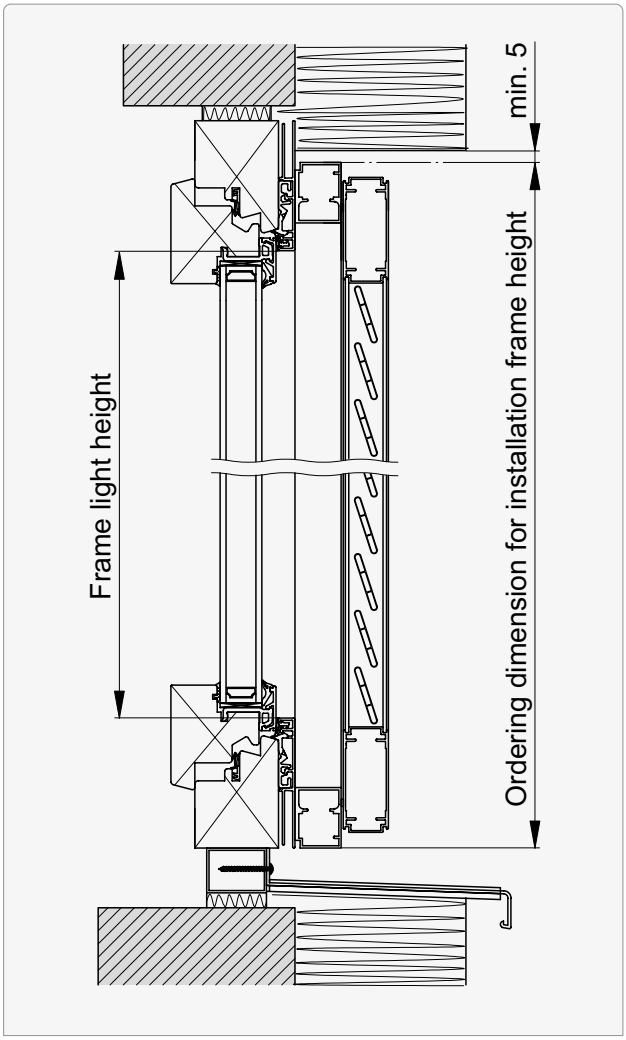


### Vertical section: Installation frame 40 x 50

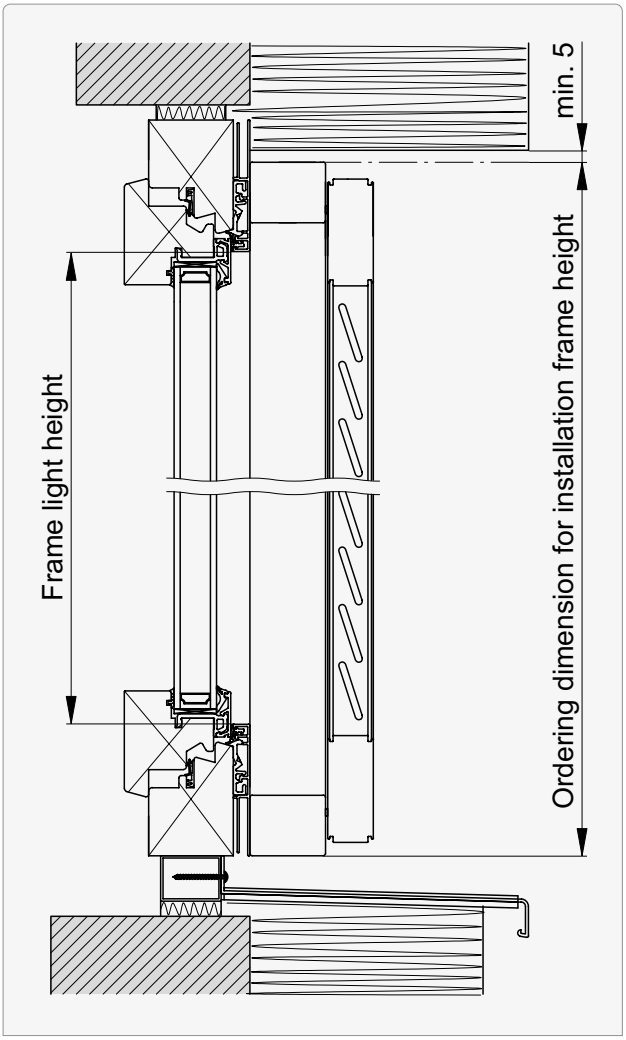


### Horizontal section: Installation frame 40 x 31

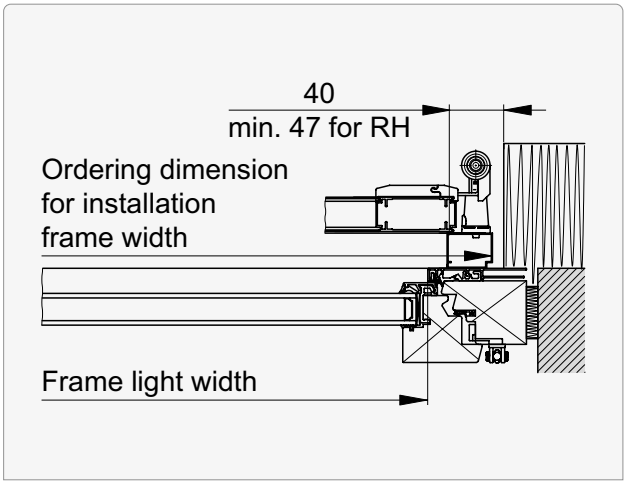


### Horizontal section: Installation frame 40 x 50

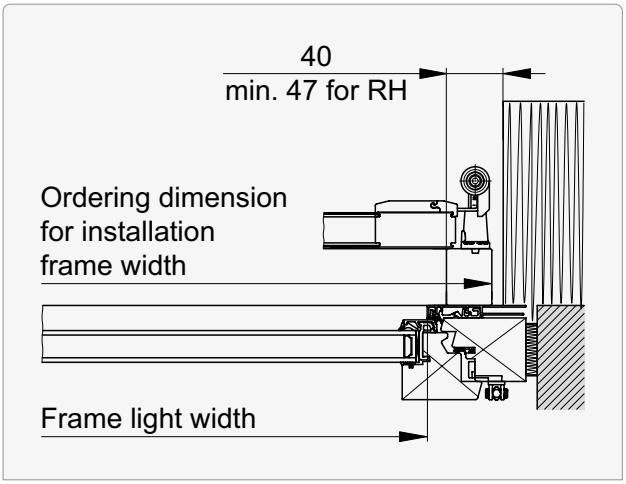


Sections | Details ..... 112

## Mounting situations | 4-sided frame

**Vertical section: Installation frame 40 x 120**

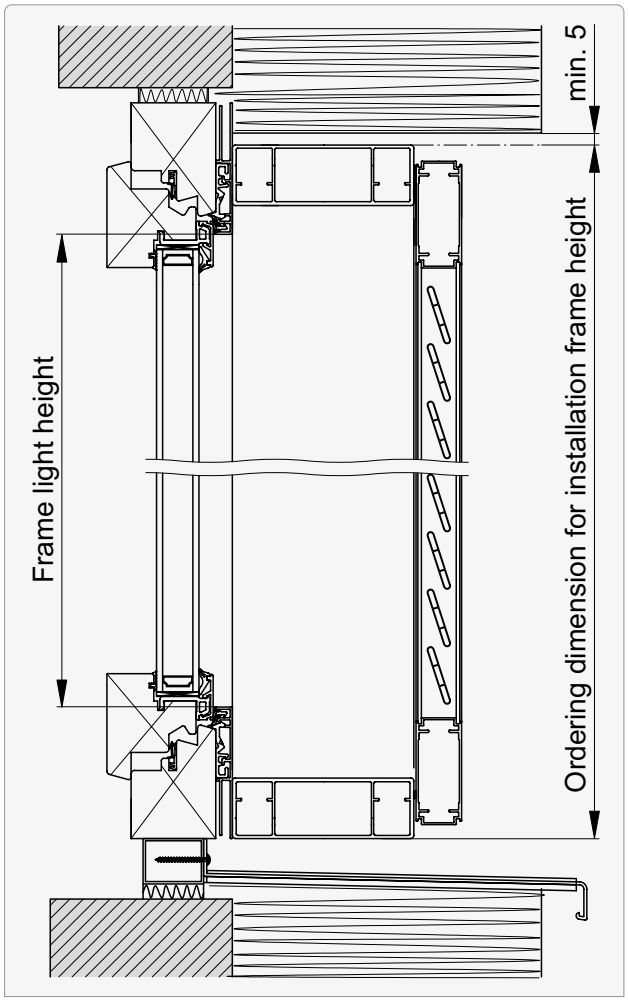


**Vertical section: Installation frame 40 x 50 with insect screen**

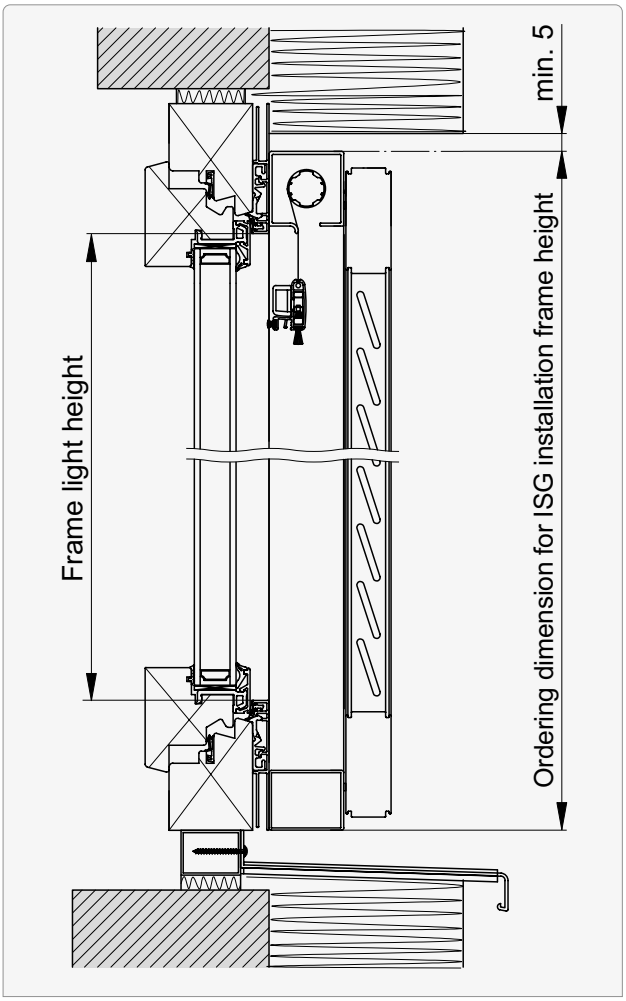


ISG: Insect screen

**Horizontal section: Installation frame 40 x 120**

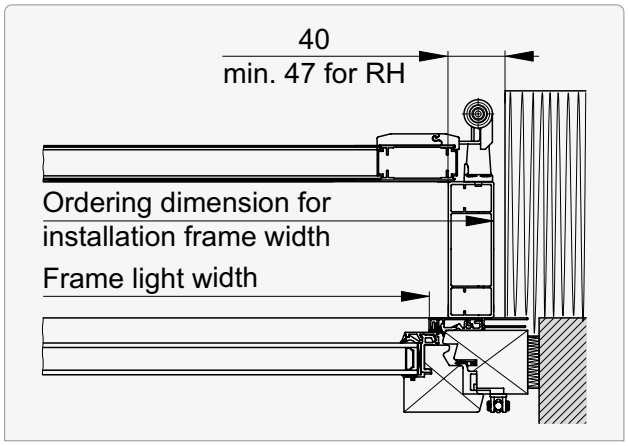


**Horizontal section: Installation frame 40 x 50 with insect screen**

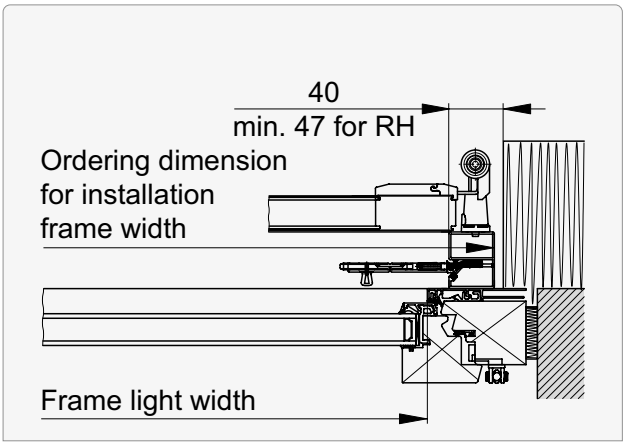


Sections | Details ..... 112

## Sash types

### Fixed slats

A EZ R T

Model A

Model EZ

Model R

Model T

## Sash types

### Movable slats

B E

Model B

Model E (Heritage Home)

## Sash types

### Closed models

C CH F G ISO

Model C

Model CH

Model F

Model G ISO

## Pre-drilled holes

**Installation frame 40x31 | 40x50 | 40x120**

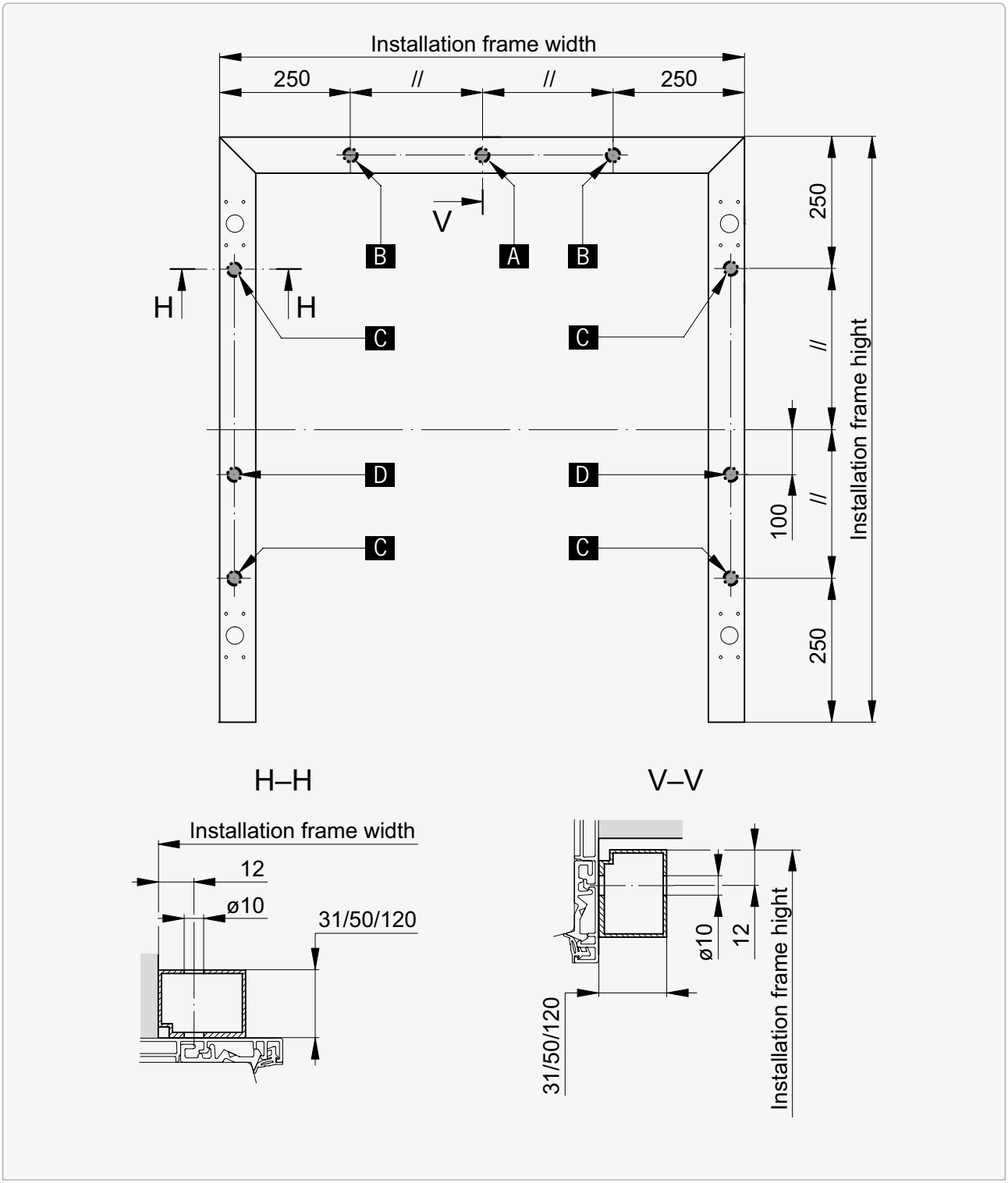


| Installation frame width | Holes |
|---|---|
| < 1800 | A |
| 1800 – 3000 | A + B |

| Installation frame height | Holes |
|---|---|
| < 1800 | C |
| 1800 – 2500 | C + D |

## Pre-drilled holes

**Installation frame 40 x 31, with lateral pre-drilled holes**

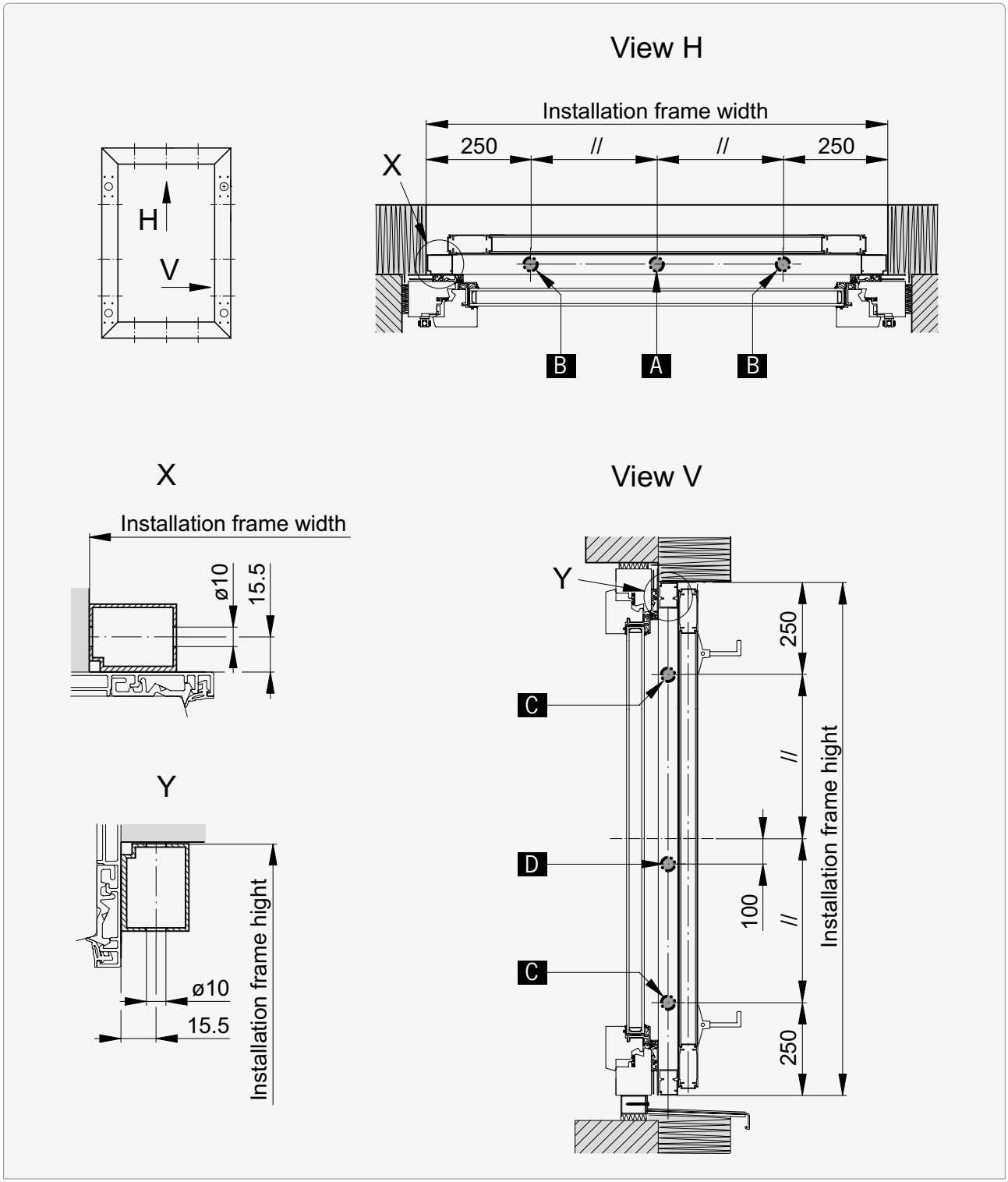


| Installation frame width | Holes |
|---|---|
| < 1800 | A |
| 1800 – 3000 | A + B |

| Installation frame height | Holes |
|---|---|
| < 1800 | C |
| 1800 – 2500 | C + D |

## Pre-drilled holes

### Installation frame 40 x 50, with insect screen

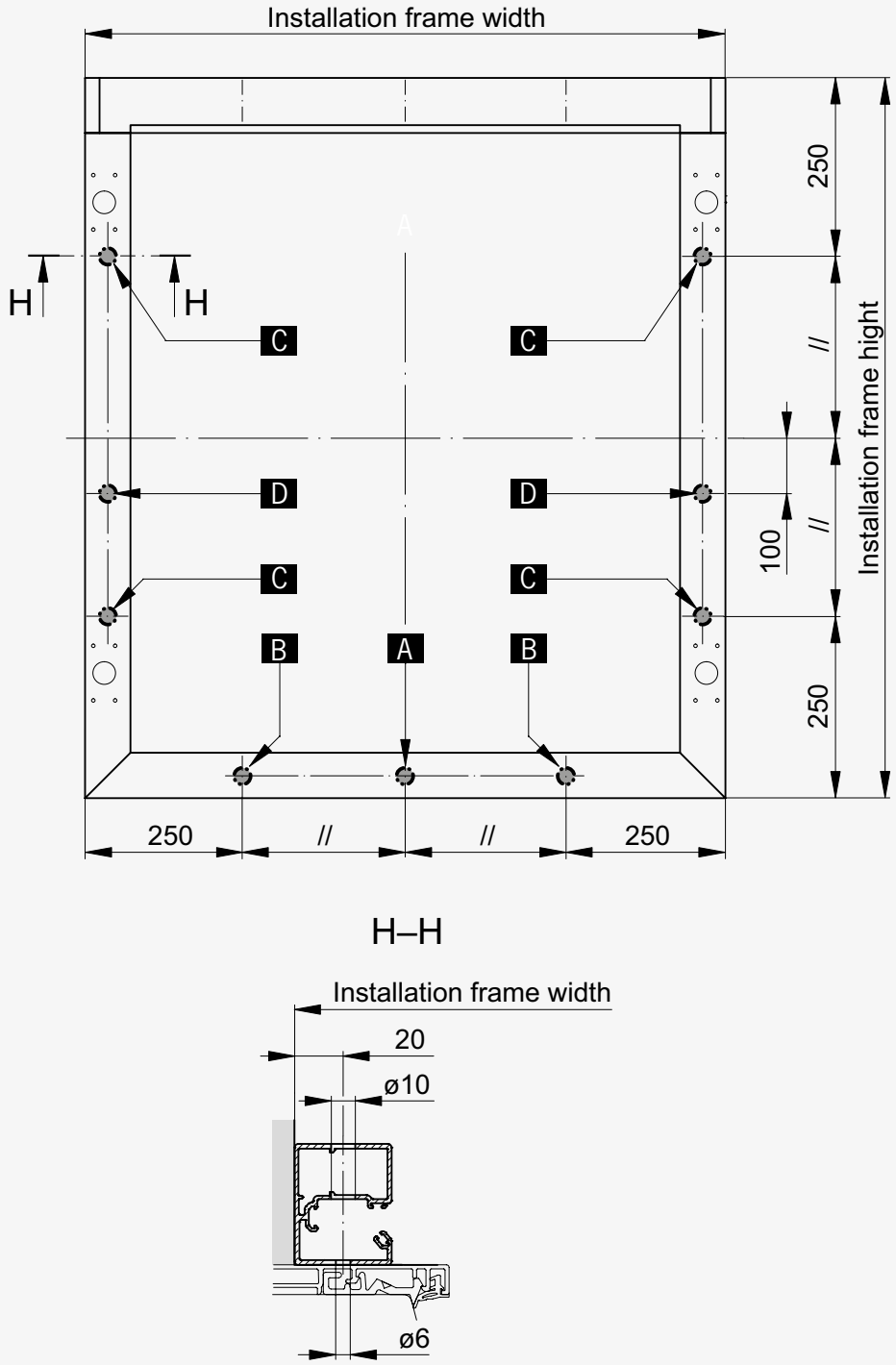


| Installation frame width | Holes |
|---|---|
| < 1800 | A |
| 1800 – 3000 | A + B |

| Installation frame height | Holes |
|---|---|
| < 1800 | C |
| 1800 – 2500 | C + D |

## Pre-drilled holes

**Installation frame 40 x 50, with insect screen and lateral pre-drilled holes**

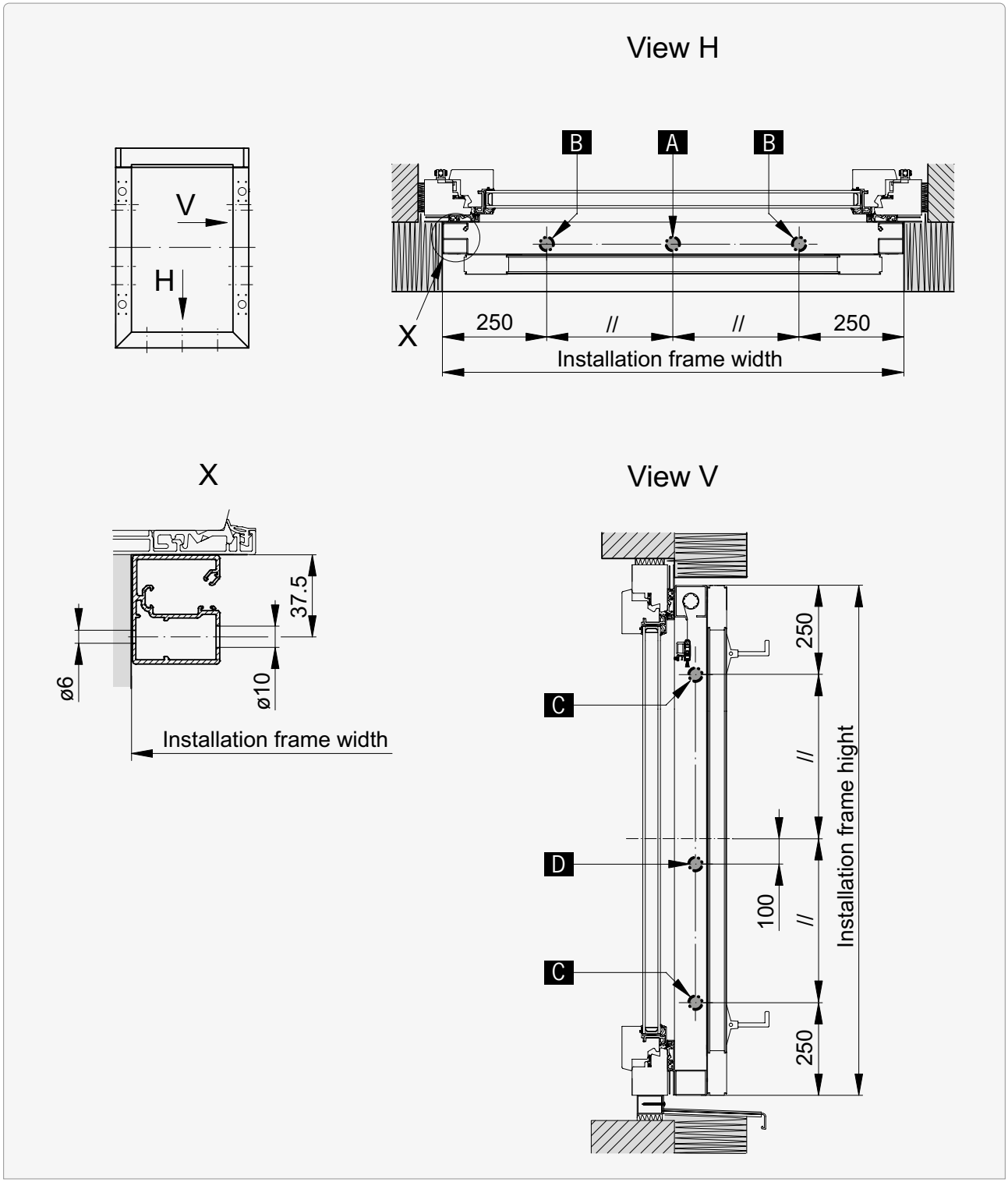


| Installation frame width | Holes |
|---|---|
| < 1800 | A |
| 1800 – 3000 | A + B |

| Installation frame height | Holes |
|---|---|
| < 1800 | C |
| 1800 – 2500 | C + D |

## Sections | Details

### Vertical section: Installation frame 40 x 31

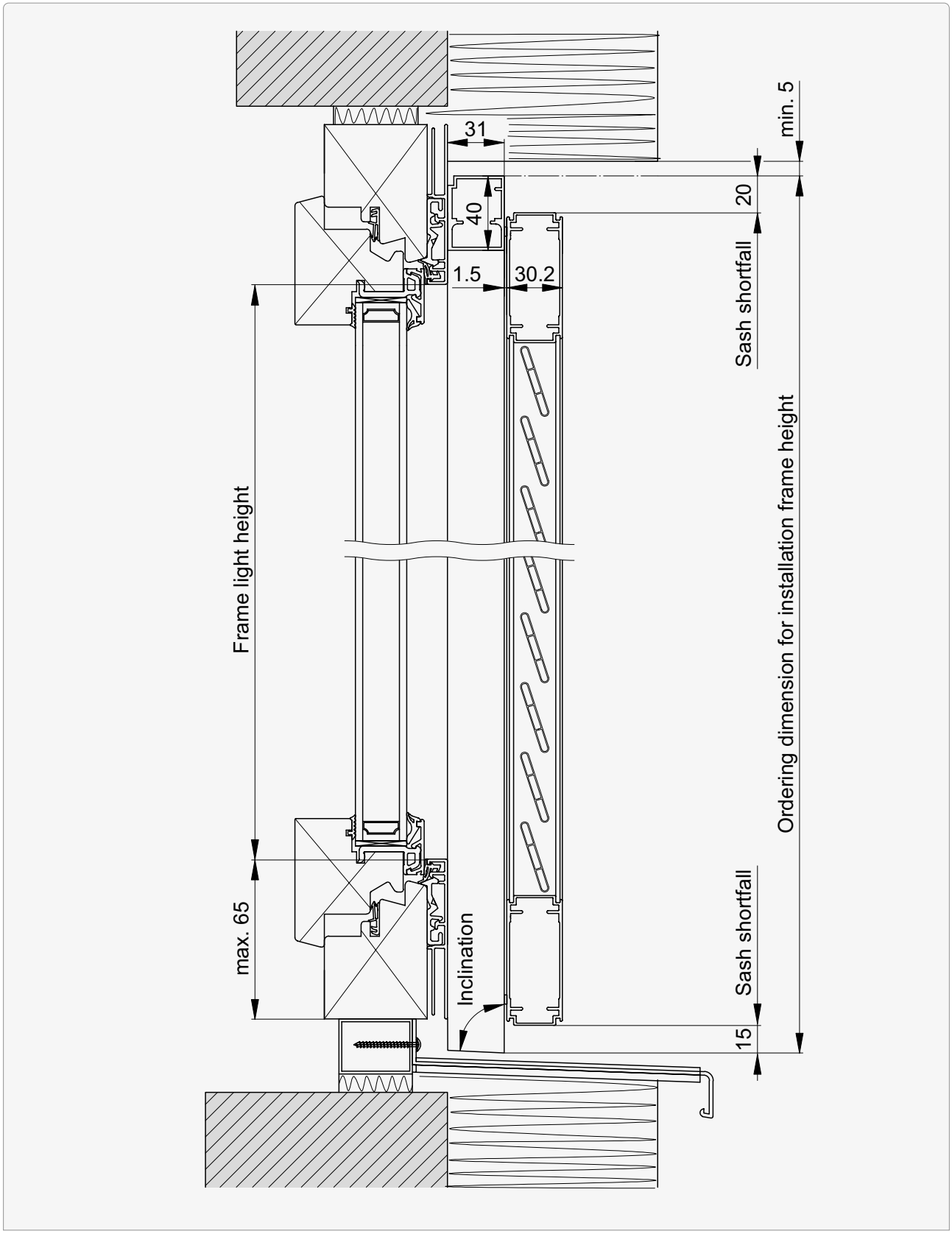

## Sections | Details

**Horizontal section: Installation frame 40 x 31**

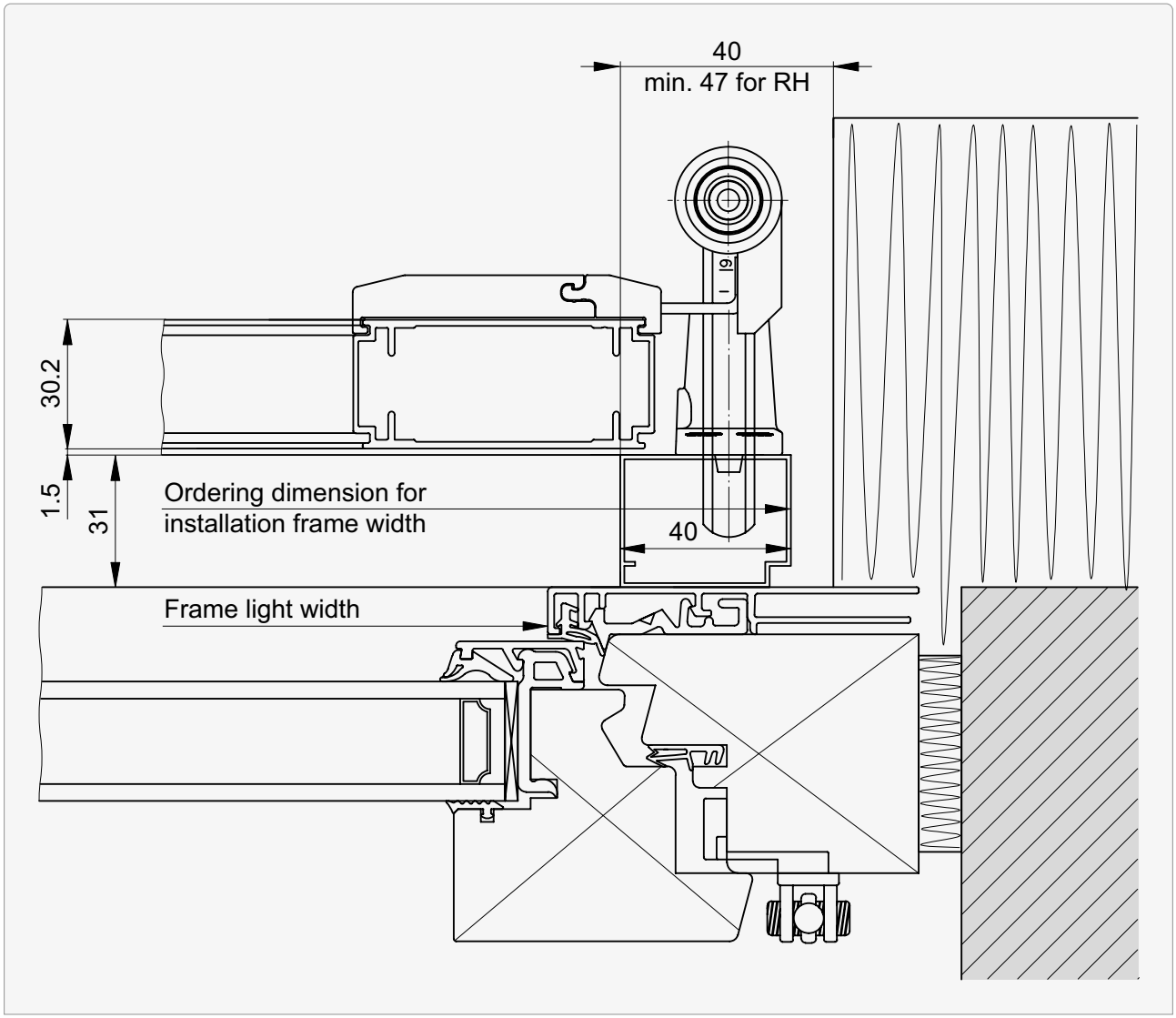

## Sections | Details

### Vertical section: Installation frame 40 x 50

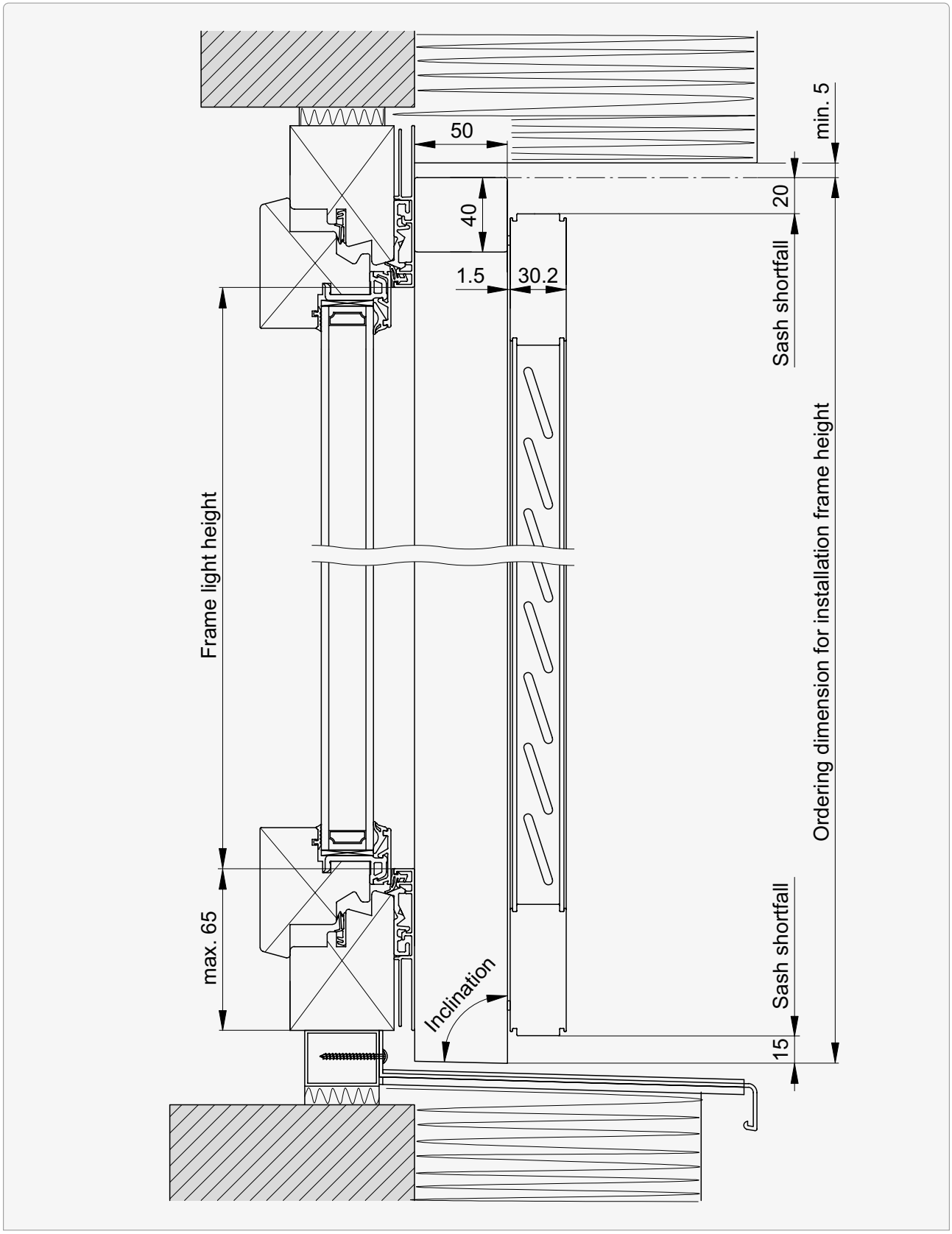

## Sections | Details

**Horizontal section: Installation frame 40 x 50**

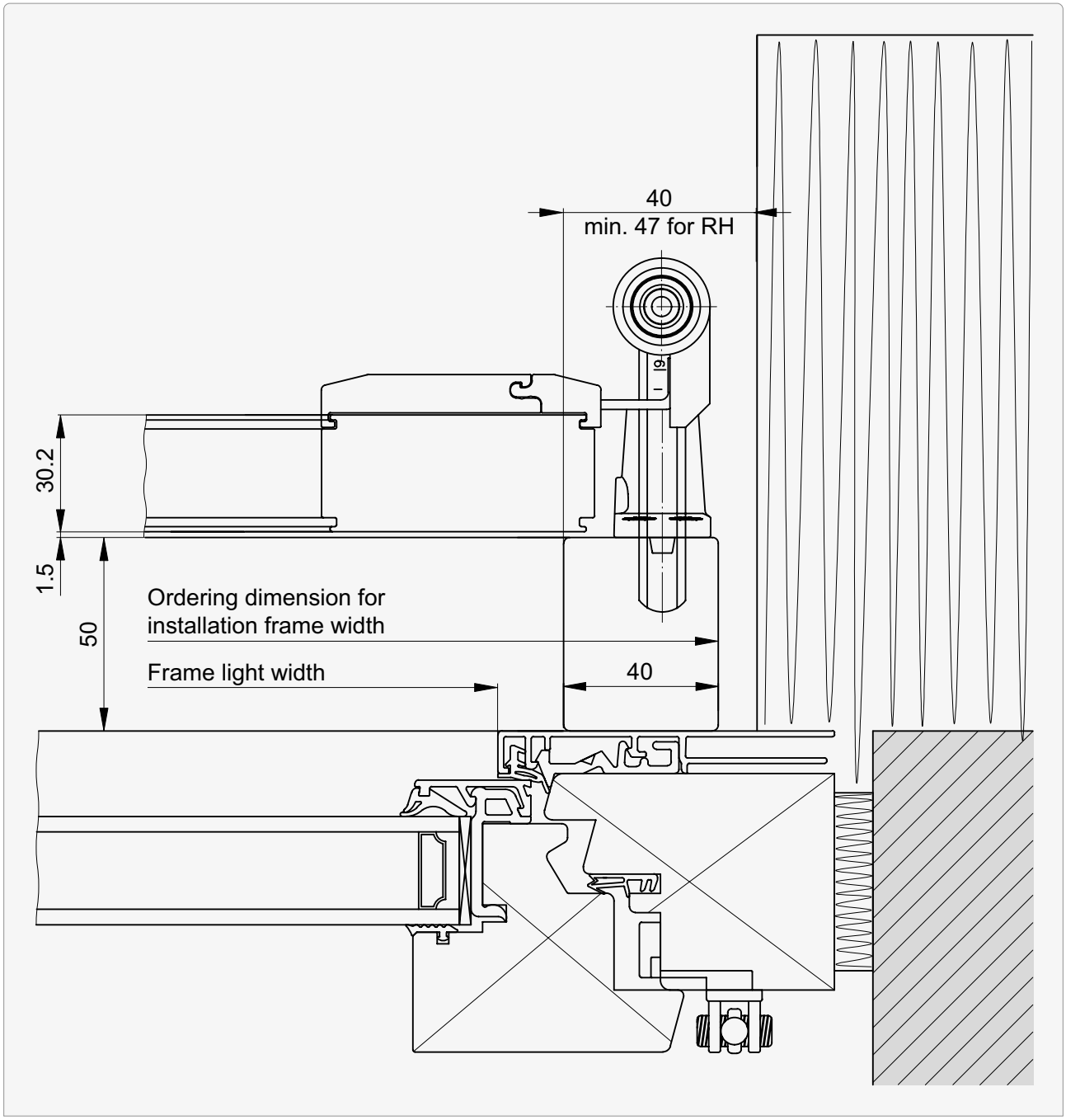

## Sections | Details

### Vertical section: Installation frame 40 x 120

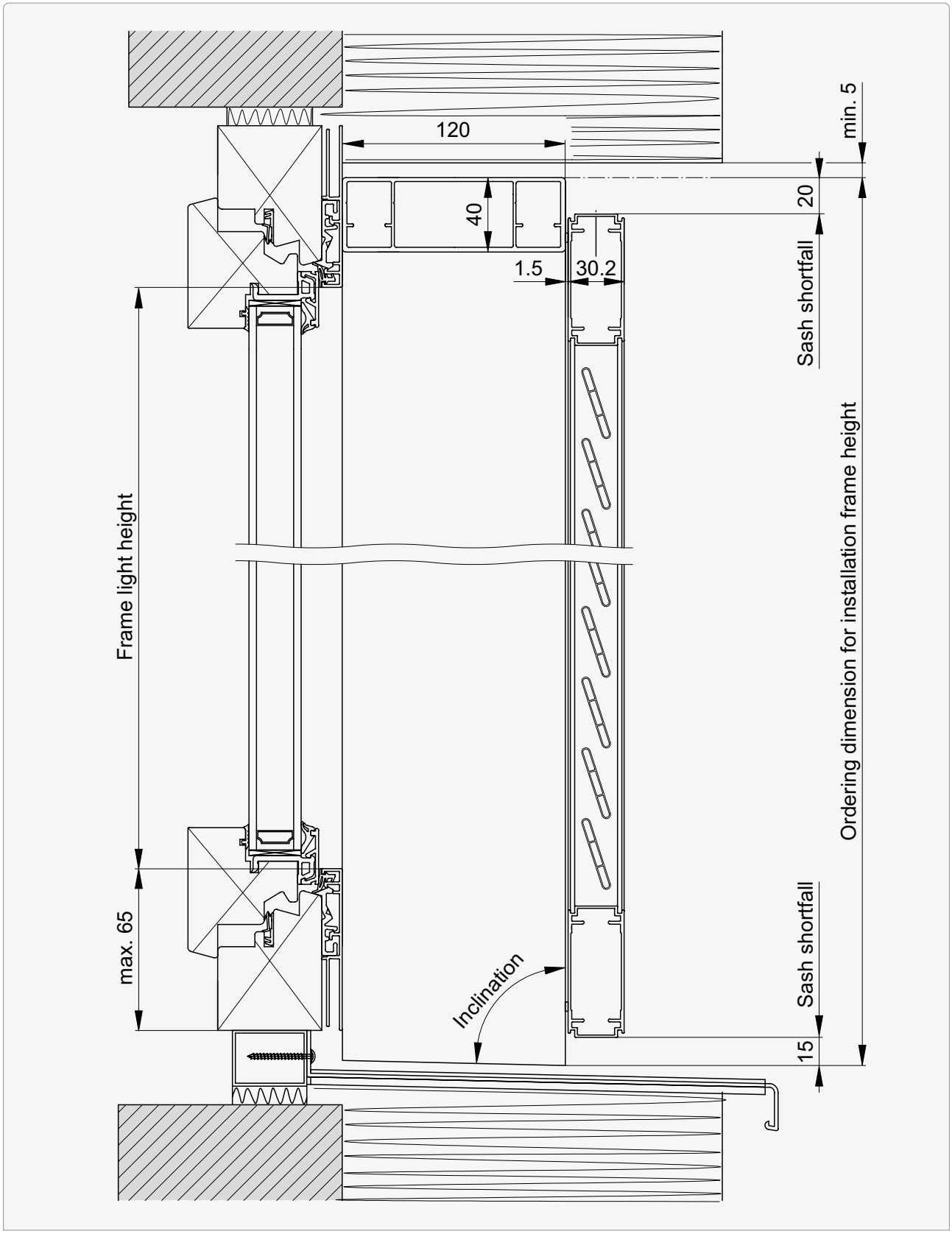

## Sections | Details

**Horizontal section: Installation frame 40 x 120**

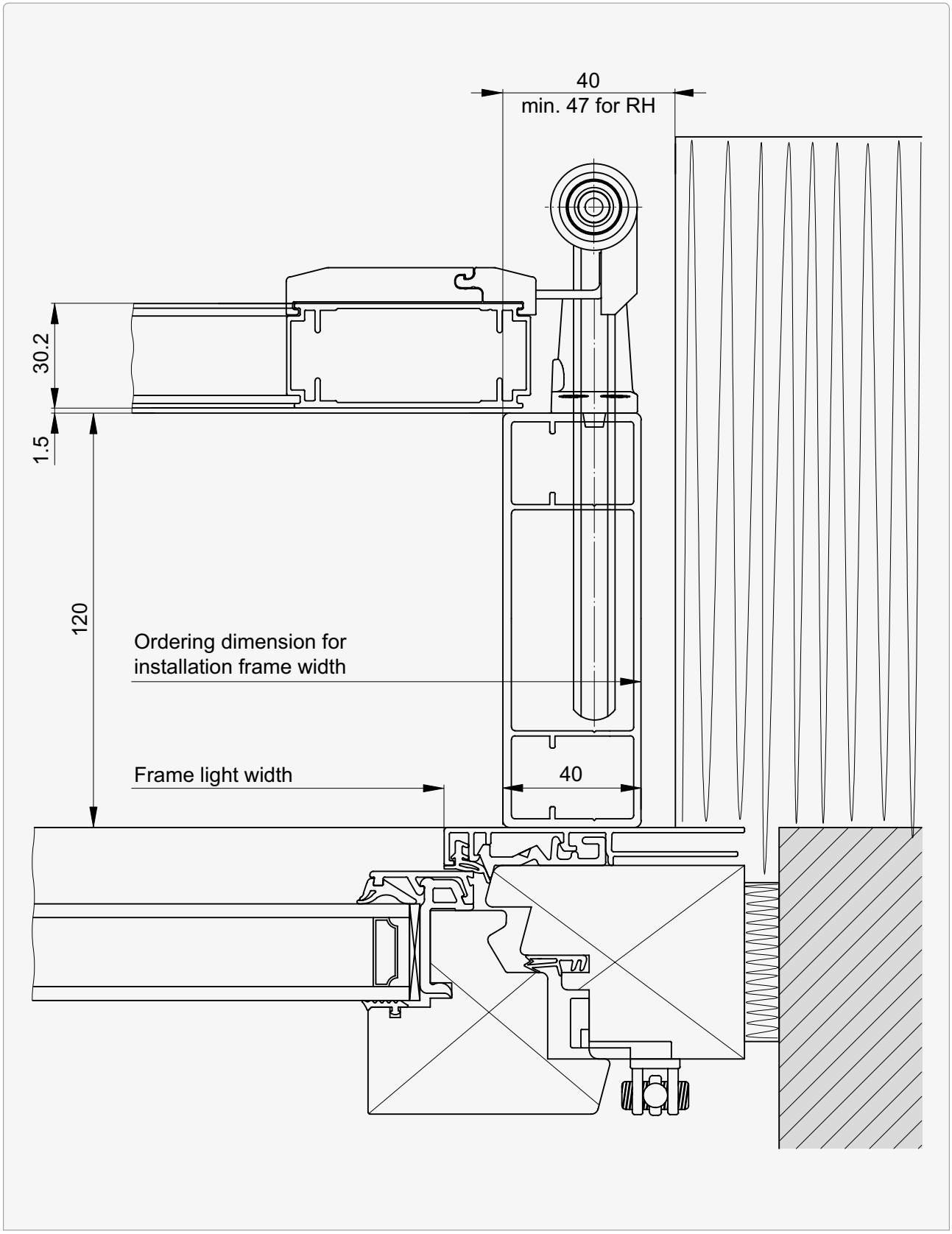

## Sections | Details

### Vertical section: Installation frame 40 x 31

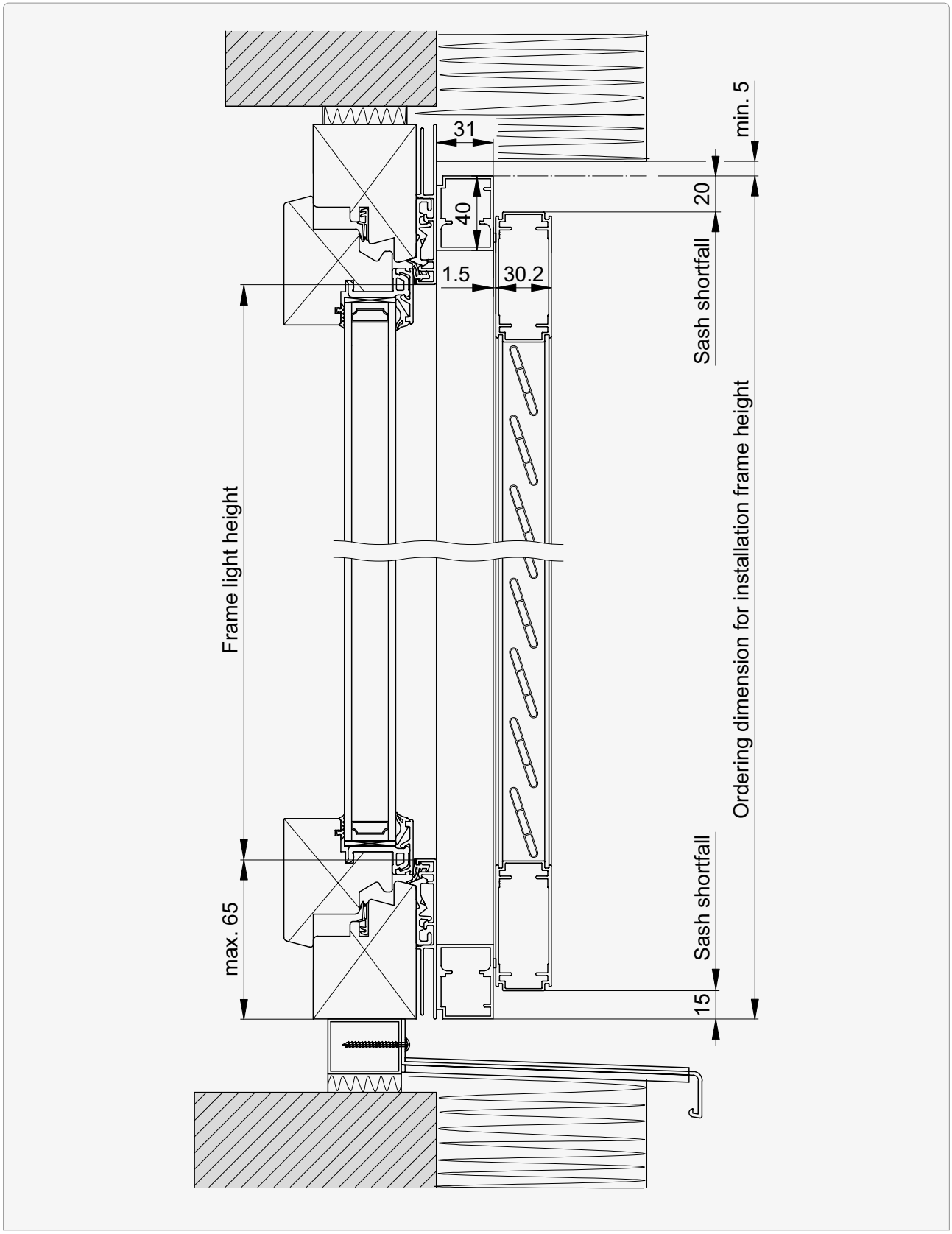

## Sections | Details

**Horizontal section: Installation frame 40 x 31**

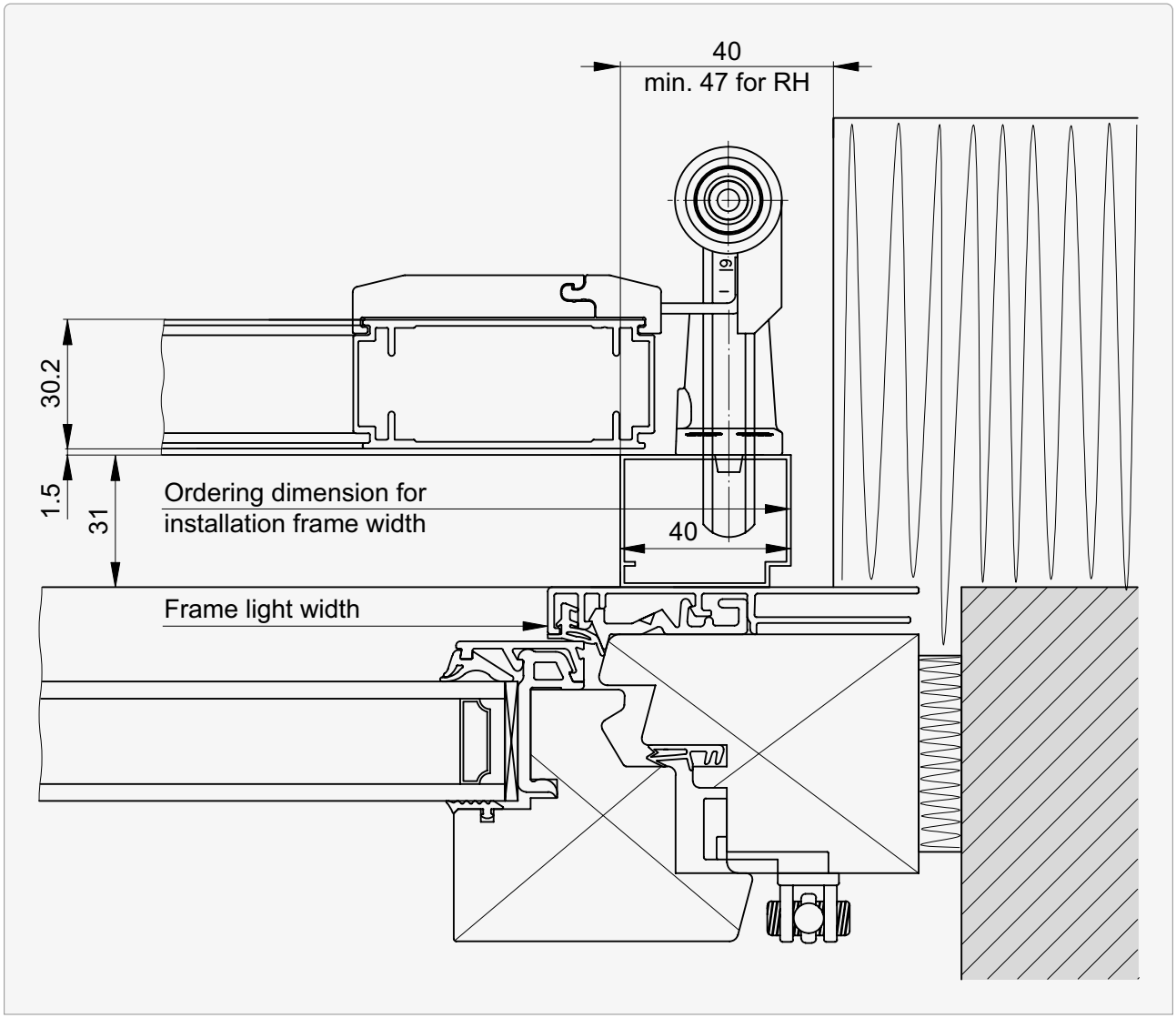

## Sections | Details

### Vertical section: Installation frame 40 x 50

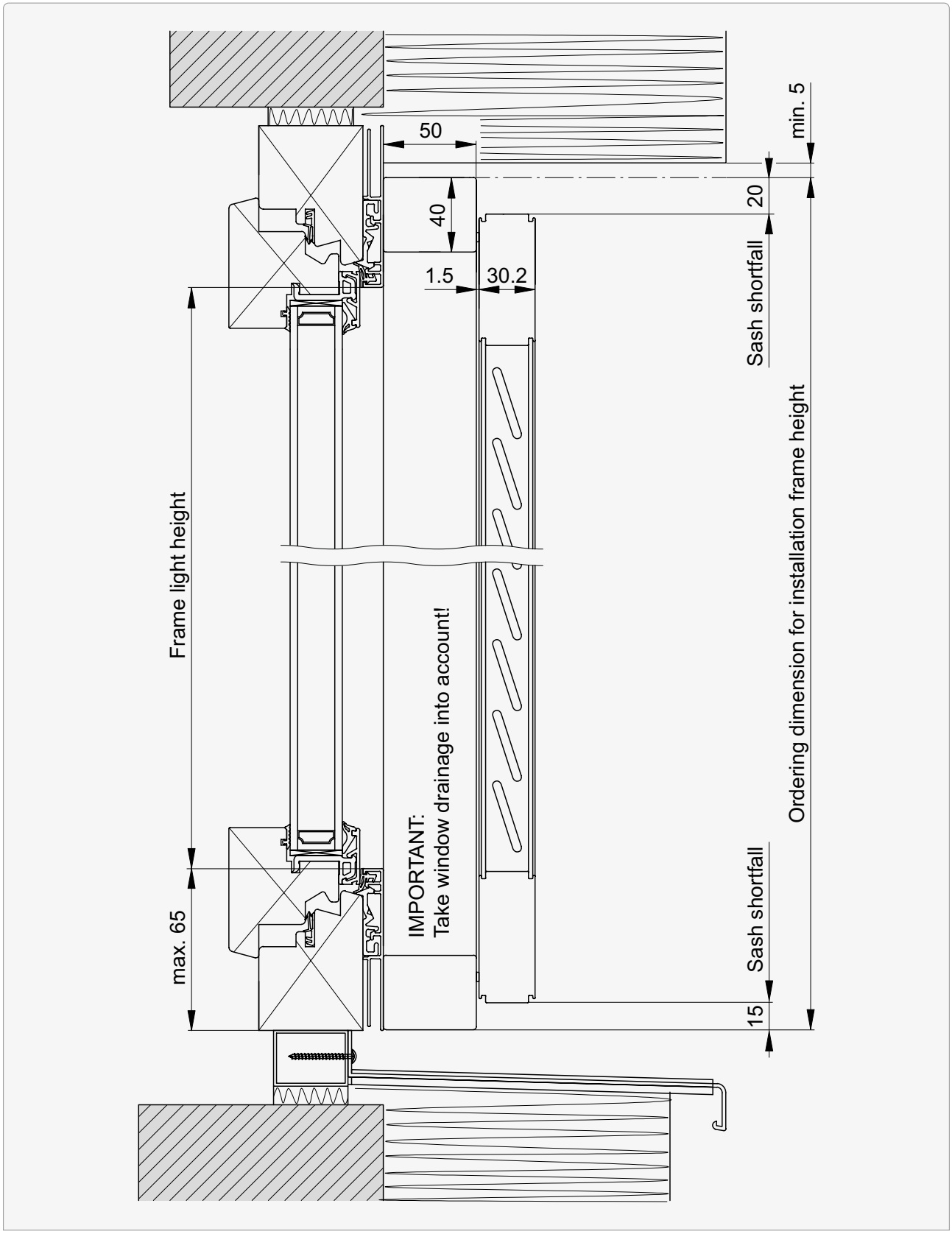

## Sections | Details

**Horizontal section: Installation frame 40 x 50**

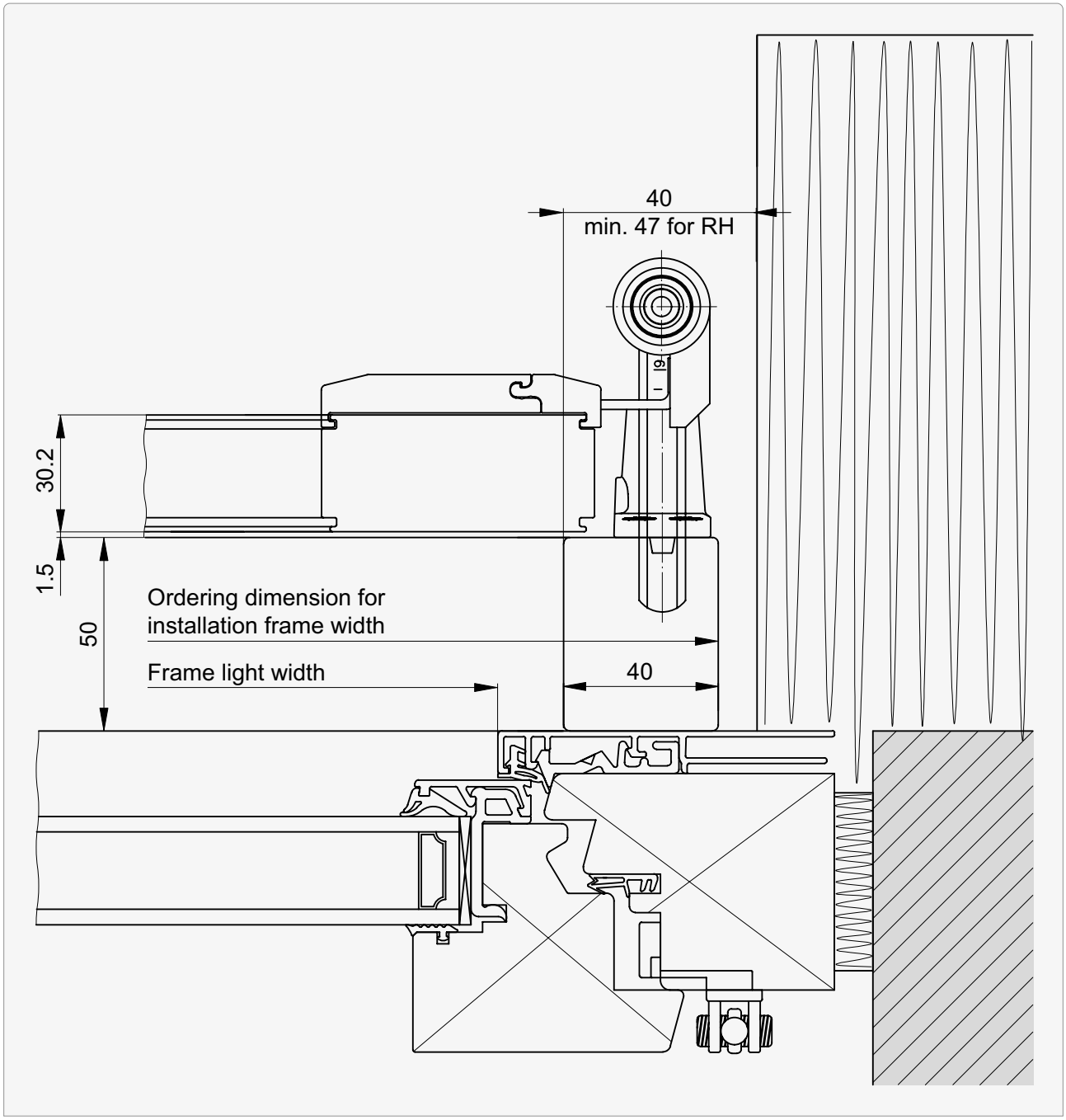

## Sections | Details

### Vertical section: Installation frame 40 x 120

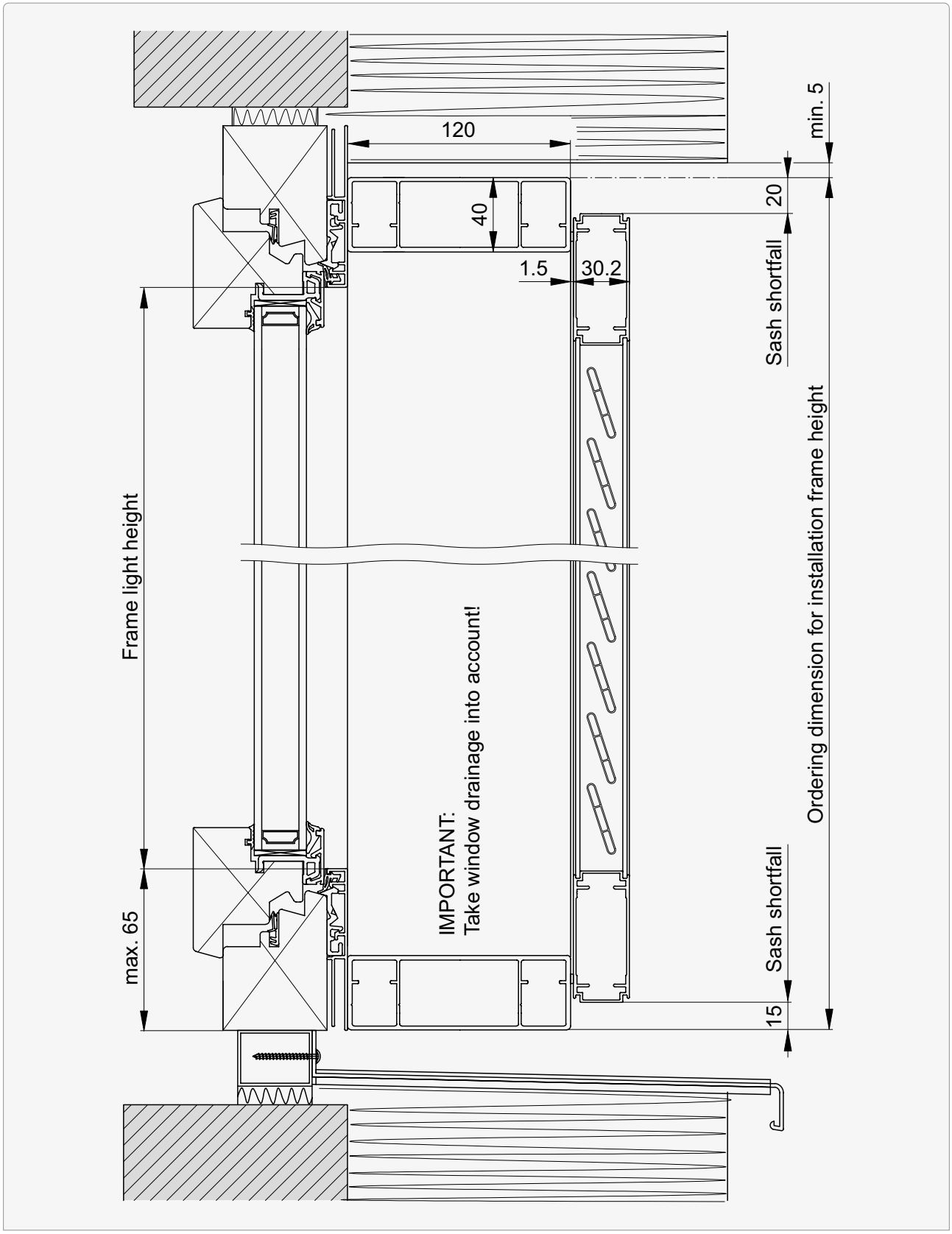

## Sections | Details

**Horizontal section: Installation frame 40 x 120**

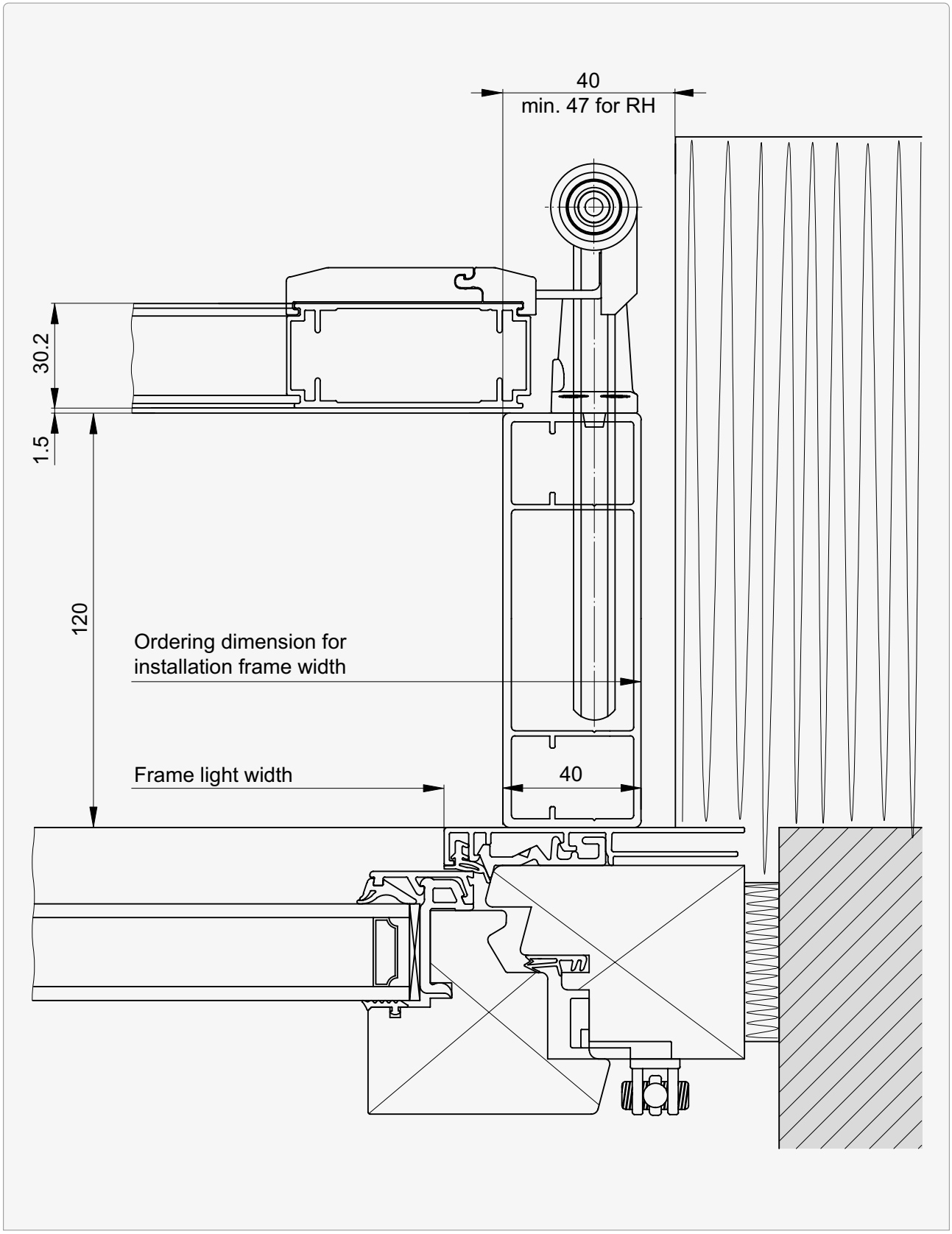

## Sections | Details

**Vertical section: Installation frame 40 x 50, with insect screen**

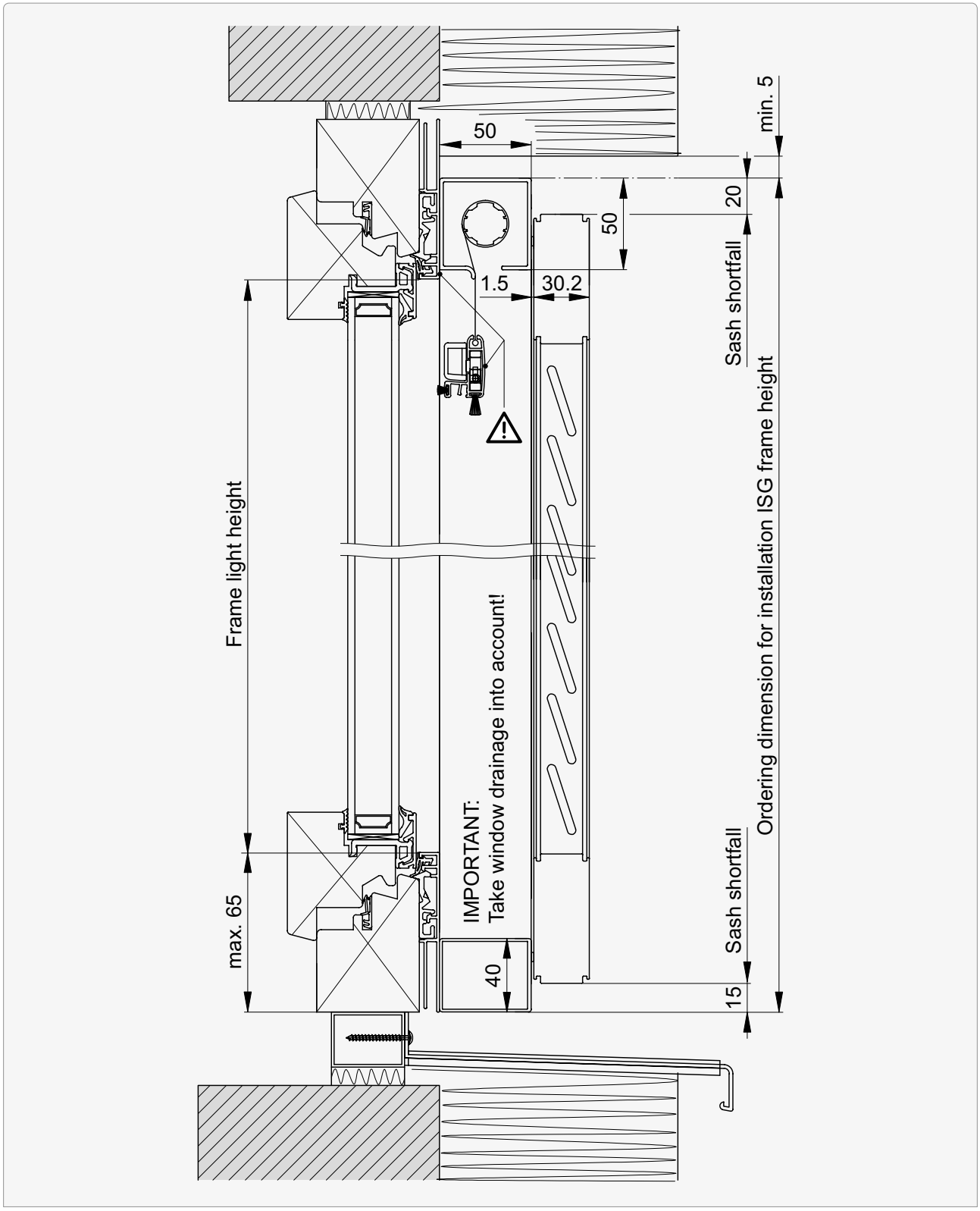


**Inside dimension of installation frame must be adjusted approximately to the height of the floor clearance so that the grip bar is easily accessible!**

## Sections | Details

**Horizontal section: Installation frame 40 x 50, with insect screen**

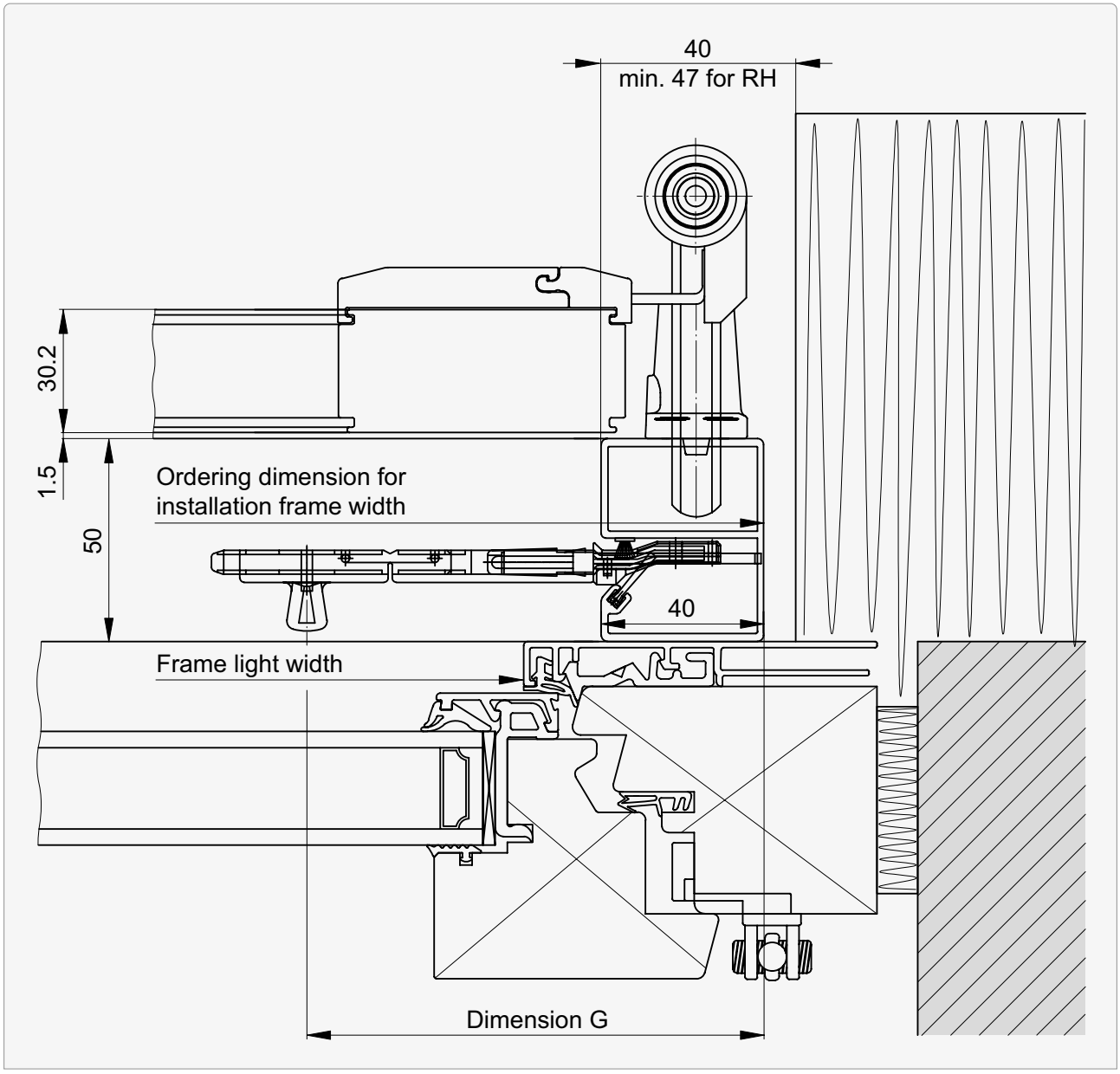


| Scheme | Dimension G |
|---|---|
| 2 | Ordering dimension for installation frame width – 150 |
| 2S | Ordering dimension for installation frame width + 150 |
| all others | $\frac{\text{Ordering dimension for installation frame width}}{2}$ |

## End stop diagrams

### Scheme 1L

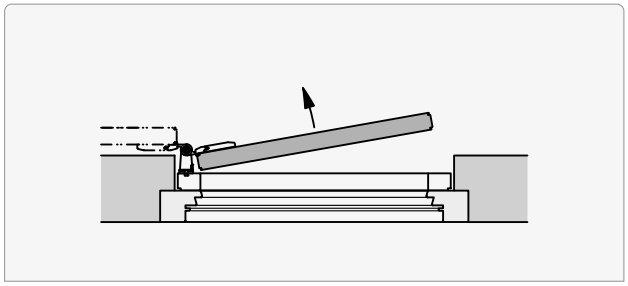

### Scheme 1R

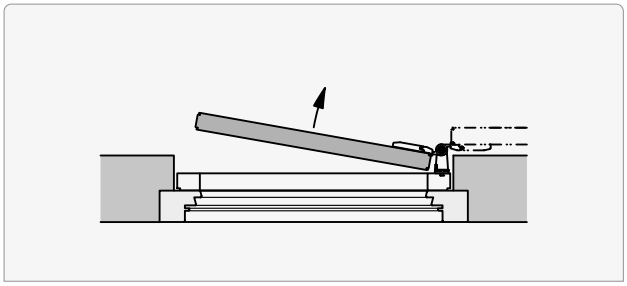

### Scheme 2

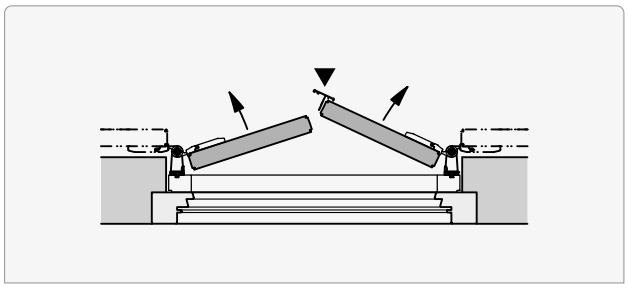

### Scheme 2S

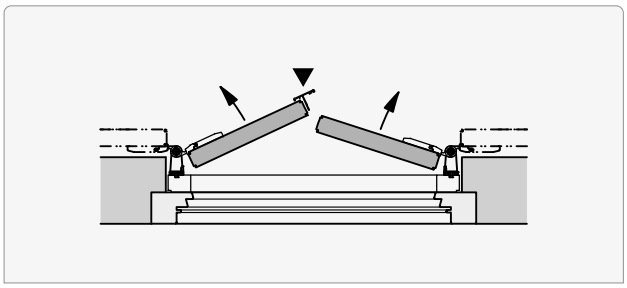

### Scheme 2L

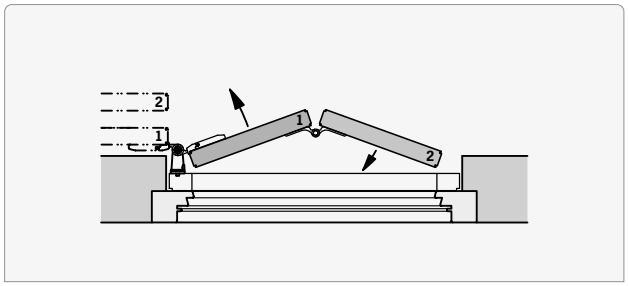


### Scheme 2R

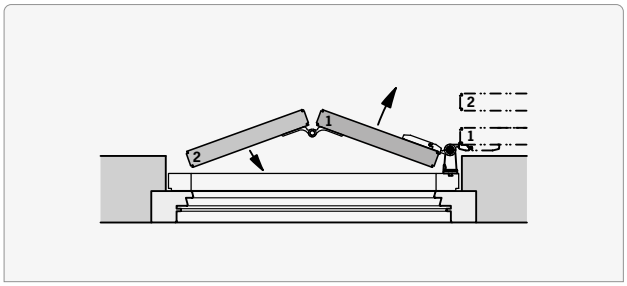


### Scheme 2LA

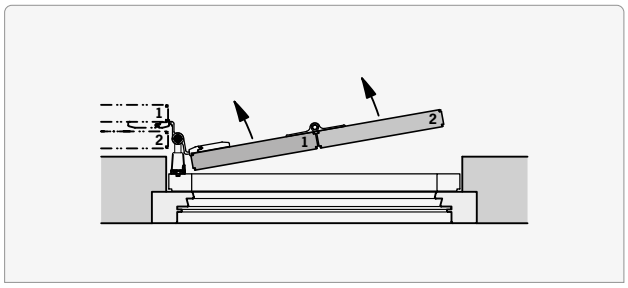


### Scheme 2RA

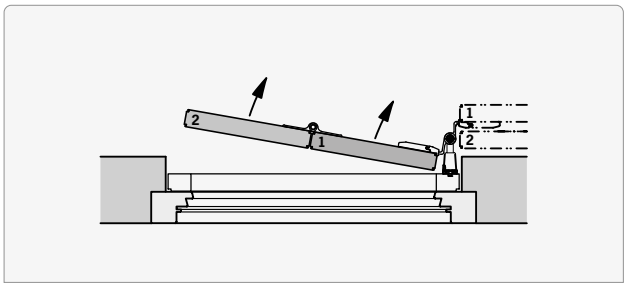


▼ Baffle plate

Limit dimensions ..... 94

## End stop diagrams

### Scheme 3L

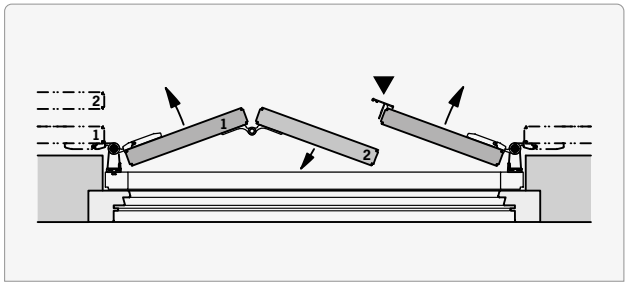

### Scheme 3R

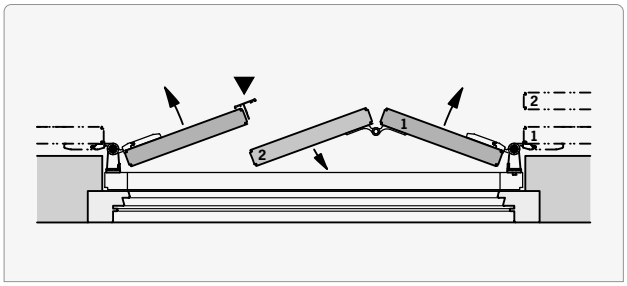

### Scheme 3LA

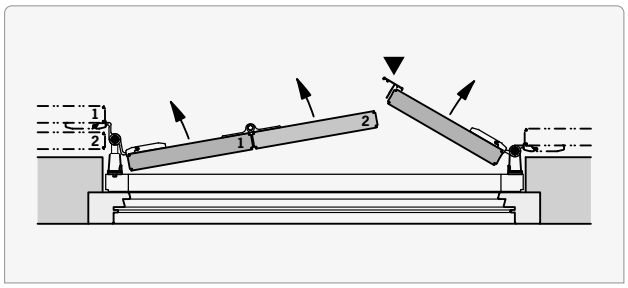

### Scheme 3RA

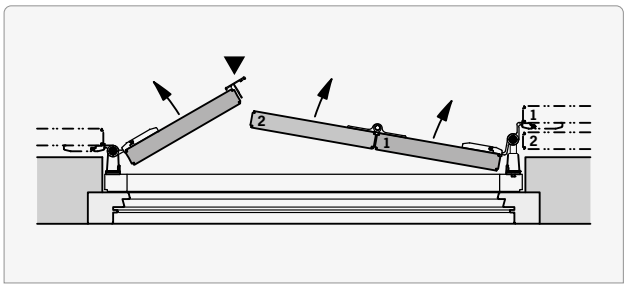

### Scheme 4

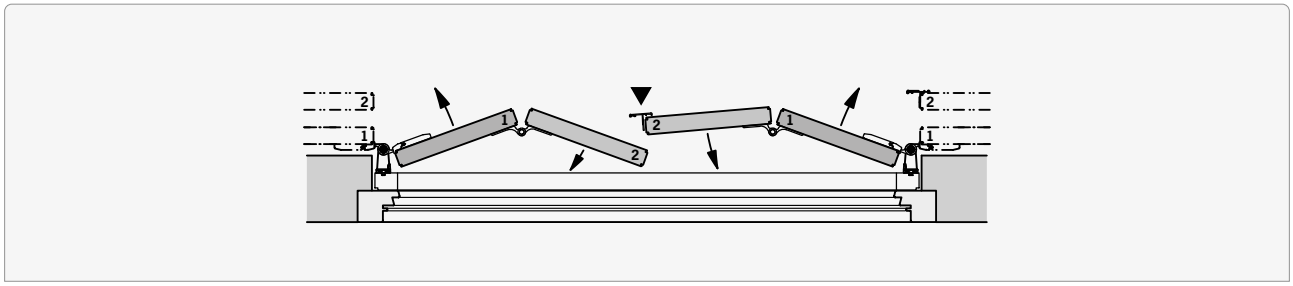

### Scheme 4A

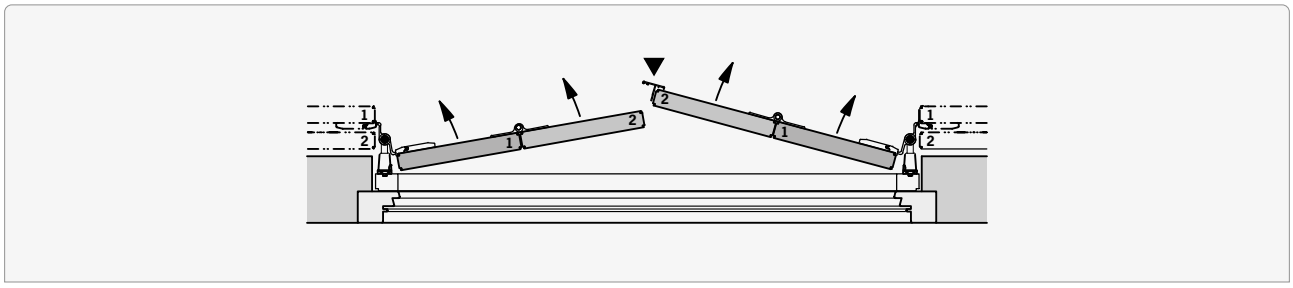

▼ Baffle plate

Limit dimensions ..... 94

## Dimensions

### Horizontal frieze

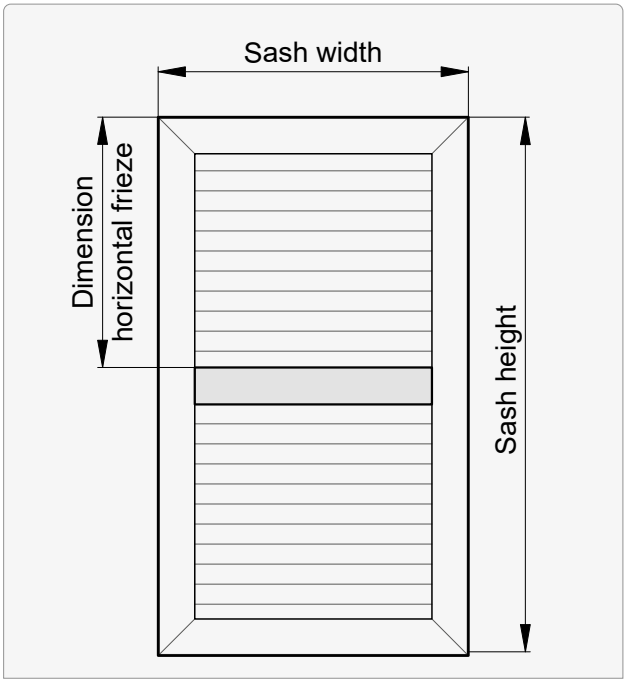


### Tubtara rivet

**Adjustment lever** B

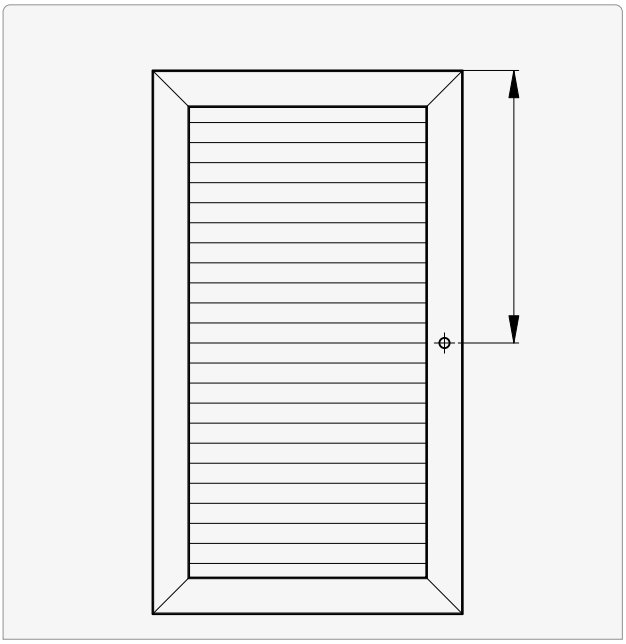

| Horizontal frieze dimension min. |
|---|
| 300 |

### Bar at top and bottom

F G ISO

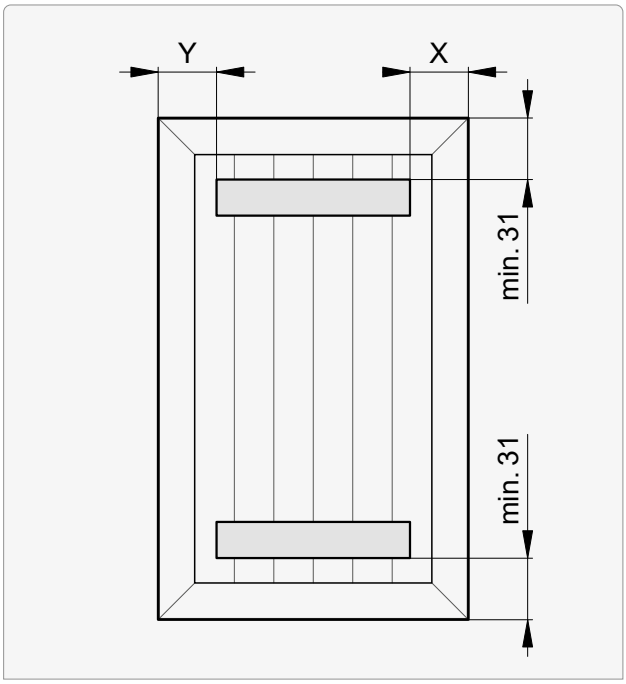


| x | y |
|---|---|
| 60 (Standard) | 60 (Standard) |

### Bar z-shaped

F G ISO

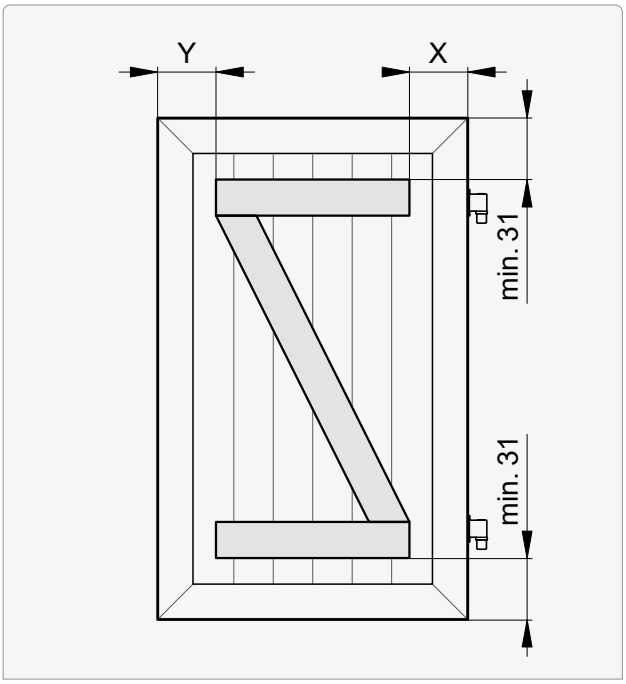


| x | y |
|---|---|
| | |

## Retention elements

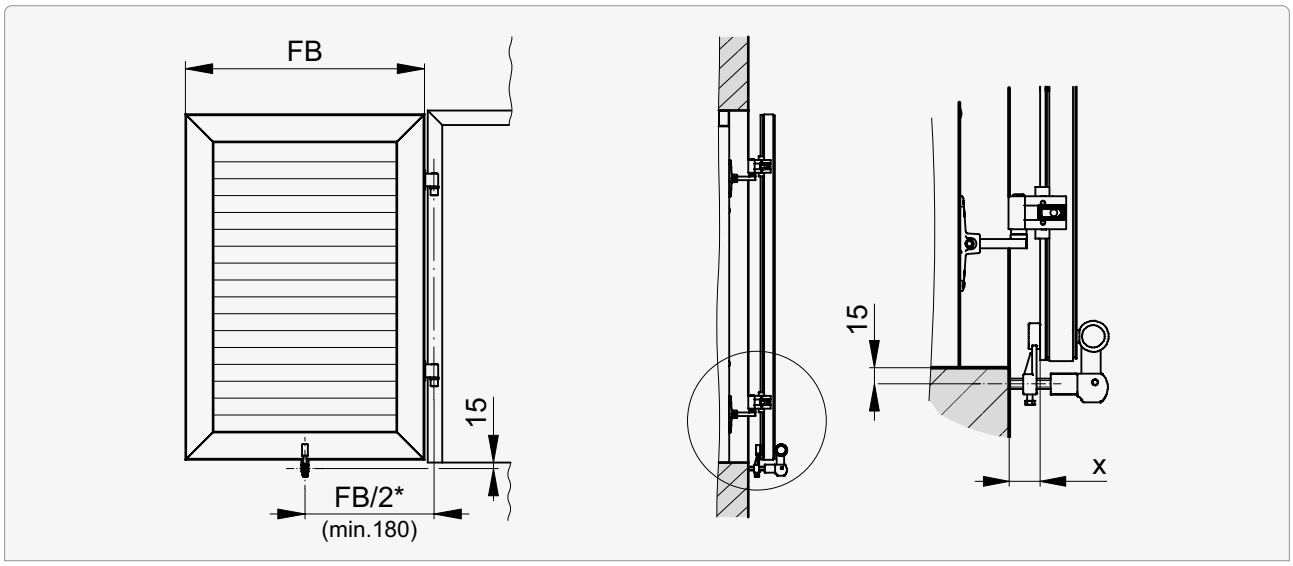


**FB** Sash width

### Shutter holder

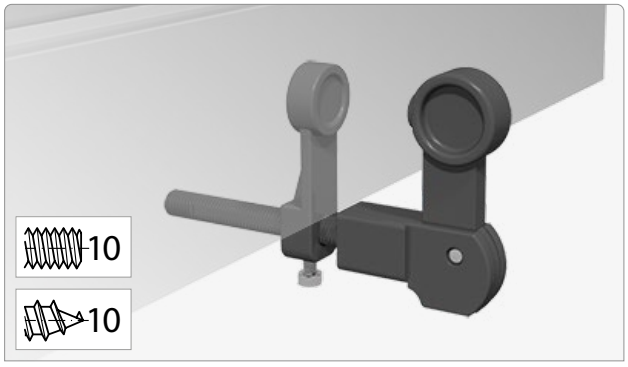


| X |
|---|
| 25 |

### Lady's head

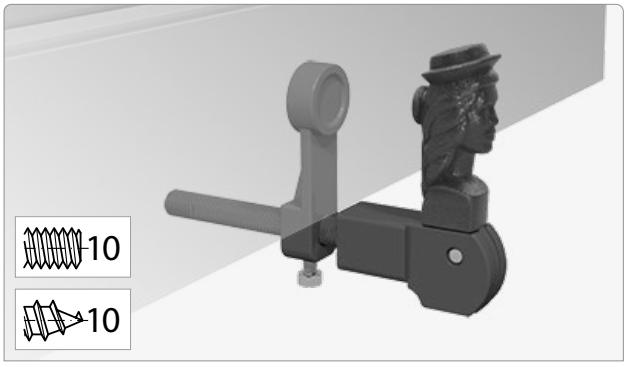


| X |
|---|
| 25 |

### Shutter latch

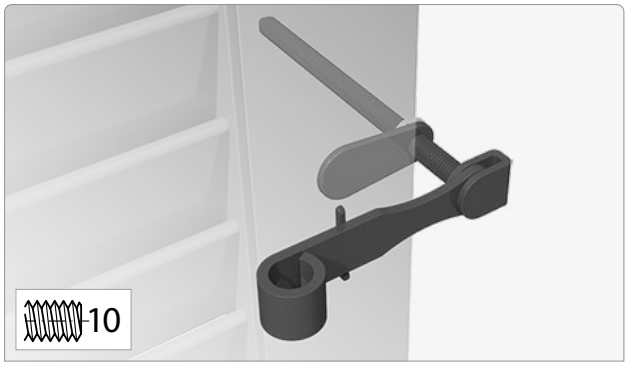


| X |
|---|
| 25 |

### Shutter holder, automatic

| X |
|---|
| 25 |

## Retention elements

### Door casement holder

| X |
|---|
| 30* |

* with fitting carrier: 35

### Convenience casement holder

**Type 1 | Standard window**

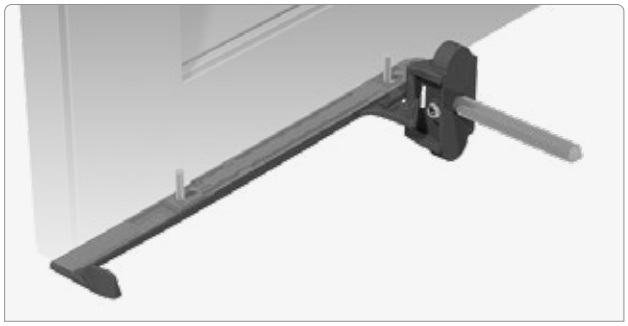

| X |
|---|
| 30 |

**Type 2 | Option window**

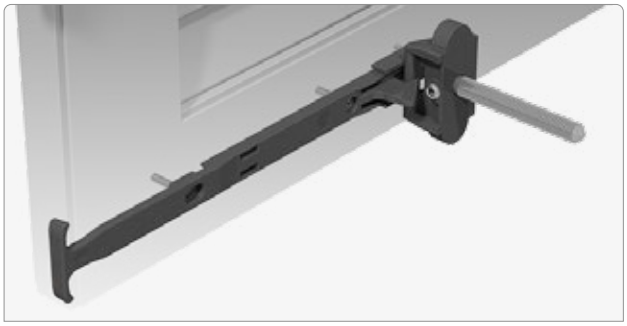

| X |
|---|
| 35 |

**Type 3 | Standard door**

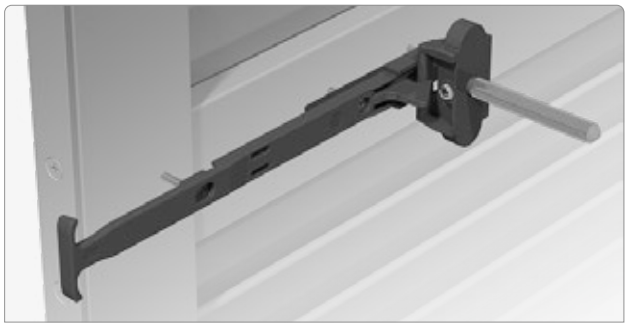

| X |
|---|
| 35 |

## Retention elements

### Snap holder

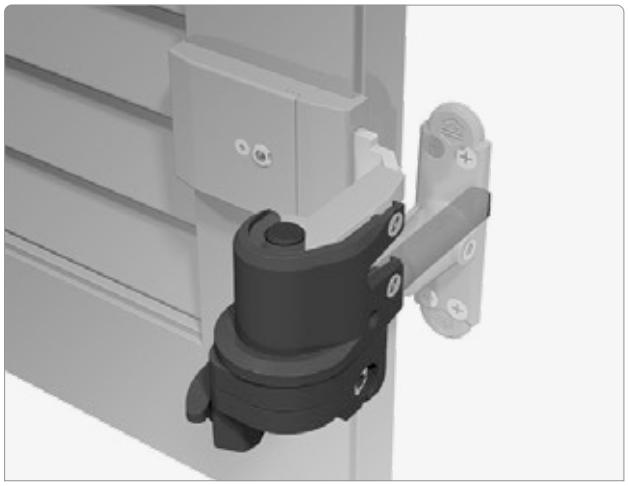

| X |
|---|
| 25 |

**Restriction:**
- max. 1.2 $m^2$
- max. 60 km/h

**of limited usage!**

## Lockers

### Snap lock

### Rod lock 2F

### Shutter middle lock

# Wing shutter conventional


| | |
|---|---|
| Limit dimensions | **130** |
| Mounting situations Wall | **134** |
| Mounting situation screen frame | **135** |
| Mounting situation for blind installation | **136** |
| Sash types | **137** |
| Sections \| Details: Wall mounting | **140** |
| Sections \| Details: Screen frame Mounting | **142** |
| Sections \| Details: Clamp and belt calculation for screen frame installation | **144** |
| Sections \| Details: Blind installation | **148** |
| End stop diagrams | **150** |
| Piston positions with JustierFix | **152** |
| Dimensions | **153** |
| Clamp | **154** |
| Bands | **156** |
| Retention elements | **160** |
| Lockers | **164** |

## Limit dimensions

### Fixed slats

| Illustration | Model | Frame profile | Slat profile | |
|---|---|---|---|---|
| | A[1] | SYS 70 x 30 | 50 x 6, with 2 reinforcement bars | |
| | **Width min. (bff)** | **Width* max. (bff)** | **Height min. (hff)** | **Height* max. (hff)** |
| | 265 | 2000 | 380 | 3000 |

| Illustration | Model | Frame profile | Slat profile | |
|---|---|---|---|---|
| | T | SYS 70 x 30 | 50 x 18, with reinforcement bars | |
| | **Width min. (bff)** | **Width* max. (bff)** | **Height min. (hff)** | **Height* max. (hff)** |
| | 265 | 1800 | 350 | 3000 |

| Illustration | Model | Frame profile | Slat profile | |
|---|---|---|---|---|
| | R[1] | SYS 70 x 30 | 60 x 6, with reinforcement bars | |
| | **Width min. (bff)** | **Width* max. (bff)** | **Height min. (hff)** | **Height* max. (hff)** |
| | 265 | 1200 | 350 | 3000 |

| Illustration | Model | Frame profile | Slat profile | |
|---|---|---|---|---|
| | EZ | SYS 70 x 30 | 75 x 13 | |
| | **Width min. (bff)** | **Width* max. (bff)** | **Height min. (hff)** | **Height* max. (hff)** |
| | 300 | 1100 | 380 | 2500 |

[1] Permitted gap between top/bottom slat and frame: 2 mm
Permitted inclination difference: 1 mm

* **bff max.** and **hff max.** are always dependent on each other.
Starting with certain widths/heights, vertical/horizontal friezes become necessary.

**In the event of a facade offset > 500 mm (e.g. for use on balconies and loggias), the system must be structurally inspected and tested in situ!**

Dimensions should always be viewed **from inside to outside**.

## Limit dimensions

### Movable slats

| Illustration | Model | Frame profile | Slat profile | |
|---|---|---|---|---|
| | B | SYS 70 x 30 | 50 x 10, with horizontal frieze | |
| | **Width min. (bff)** | **Width* max. (bff)** | **Height min. (hff)** | **Height* max. (hff)** |
| | 380 | 1500 | 380 | 2500 |

| Illustration | Model | Frame profile | Slat profile | |
|---|---|---|---|---|
| | E | SYS 70 x 30 | 100 x 13<br>75 x 13 | |
| | **Width min. (bff)** | **Width* max. (bff)** | **Height min. (hff)** | **Height* max. (hff)** |
| | 550 | 1500 | 550 | 2500 |

* **bff max.** and **hff max.** are always dependent on each other.
Starting with certain widths/heights, vertical/horizontal friezes become necessary.

**In the event of a facade offset > 500 mm (e.g. for use on balconies and loggias), the system must be structurally inspected and tested in situ!**

Dimensions should always be viewed **from inside to outside**.

**bff** Finished sash width

**hff** Finished sash height

## Limit dimensions

### Closed models

| Illustration | Model | Frame profile | Filling | |
|---|---|---|---|---|
| | C | SYS 70 x 30 | 3 mm aluminum sheet | |
| | **Width min. (bff)** | **Width* max. (bff)** | **Height min. (hff)** | **Height* max. (hff)** |
| | 350 | 1500 | 350 | 2500 |

| Illustration | Model | Frame profile | Filling | |
|---|---|---|---|---|
| | CH | SYS 70 x 30 | 18 mm hollow-chamber profile horizontal or vertical | |
| | **Width min. (bff)** | **Width* max. (bff)** | **Height min. (hff)** | **Height* max. (hff)** |
| | 350 | 1500 | 350 | 2500 |

| Illustration | Model | Frame profile | Filling | |
|---|---|---|---|---|
| | F | SYS 21 x 30<br>21 x 28 | 23 mm hollow-chamber profile | |
| | **Width min. (bff)** | **Width* max. (bff)** | **Height min. (hff)** | **Height* max. (hff)** |
| | 350 | 1000 | 350 | 2500 |

| Illustration | Model | Frame profile | Filling | |
|---|---|---|---|---|
| | G ISO | SYS 21 x 30 | 23 mm sandwich panel | |
| | **Width min. (bff)** | **Width* max. (bff)** | **Height min. (hff)** | **Height* max. (hff)** |
| | 350 | 850 | 350 | 2500 |

* **bff max.** and **hff max.** are always dependent on each other.
Starting with certain widths/heights, vertical/horizontal friezes become necessary.

**In the event of a facade offset > 500 mm (e.g. for use on balconies and loggias), the system must be structurally inspected and tested in situ!**

Dimensions should always be viewed **from inside to outside**.

**bff** Finished sash width

**hff** Finished sash height

## Mounting situations Wall

### Vertical section: Shutter rabbet

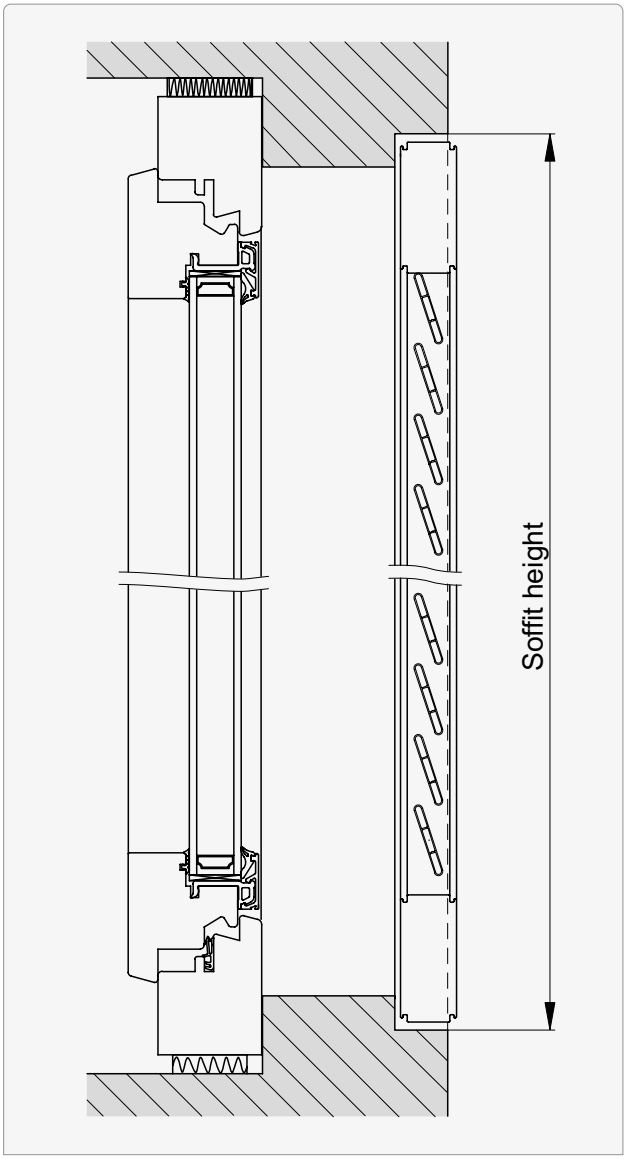


### Vertical section: In the soffit

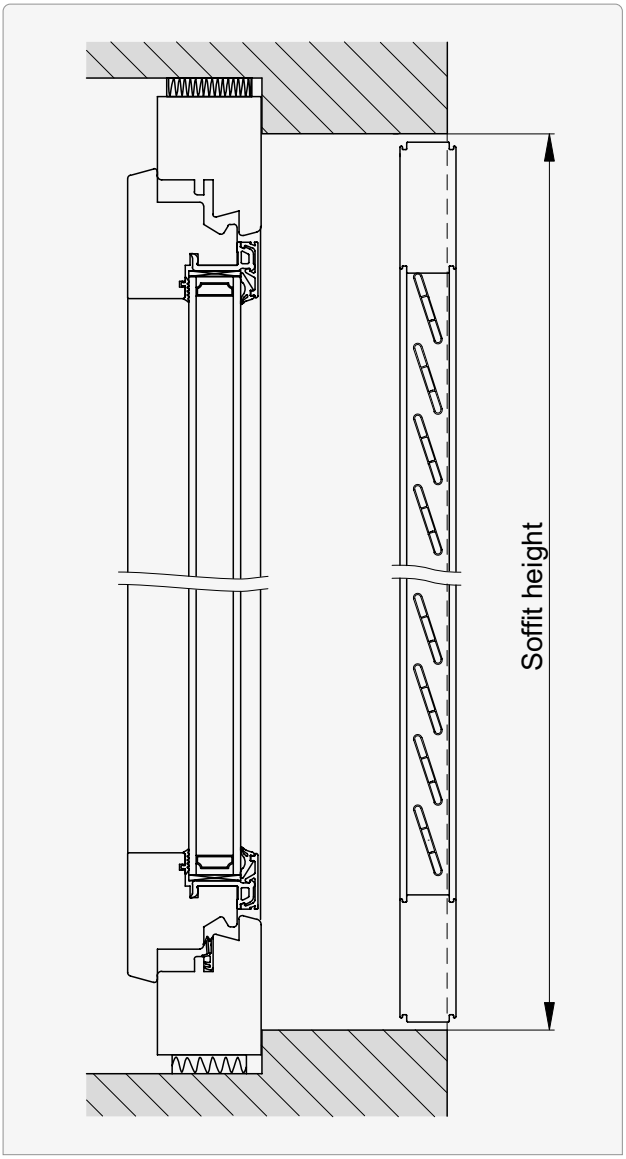


### Horizontal section: Shutter rabbet

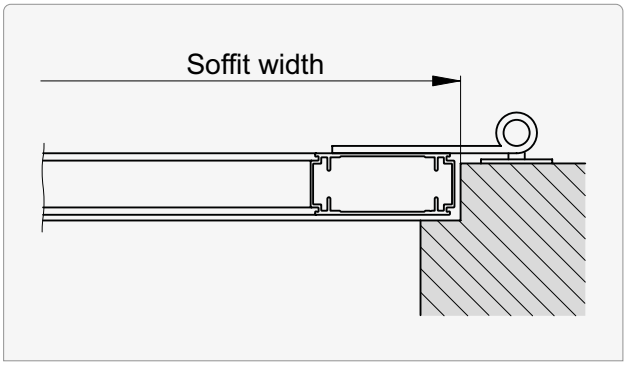


### Horizontal section: In the soffit

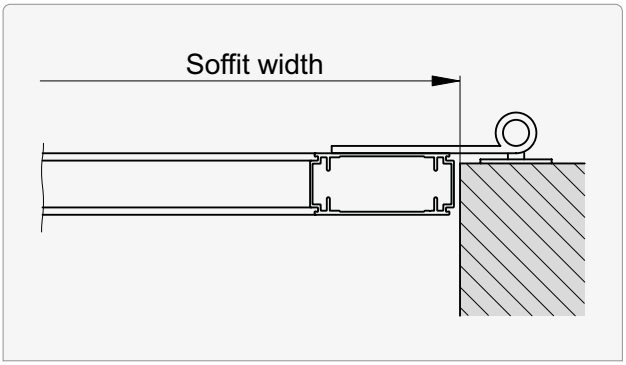


Sections | Details ..... 140

## Mounting situations Wall

### Vertical section: On the soffit

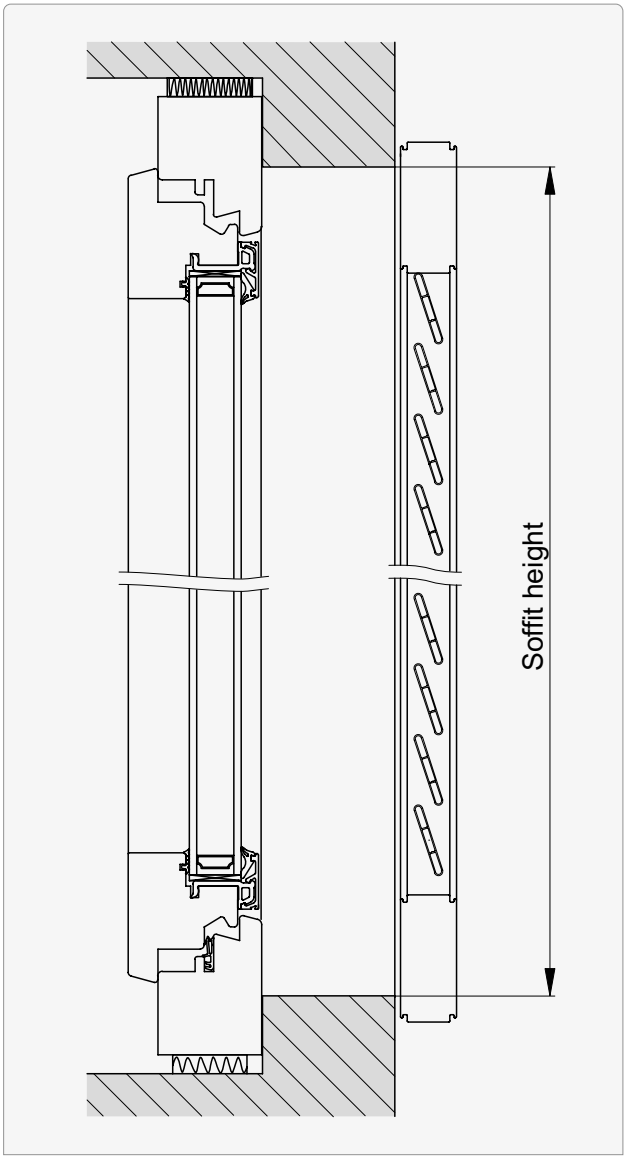


### Horizontal section: On the soffit

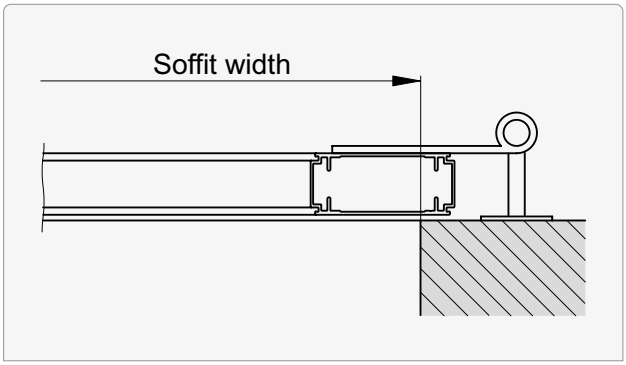


Sections | Details ..... 140

## Mounting situation screen frame

### Vertical section

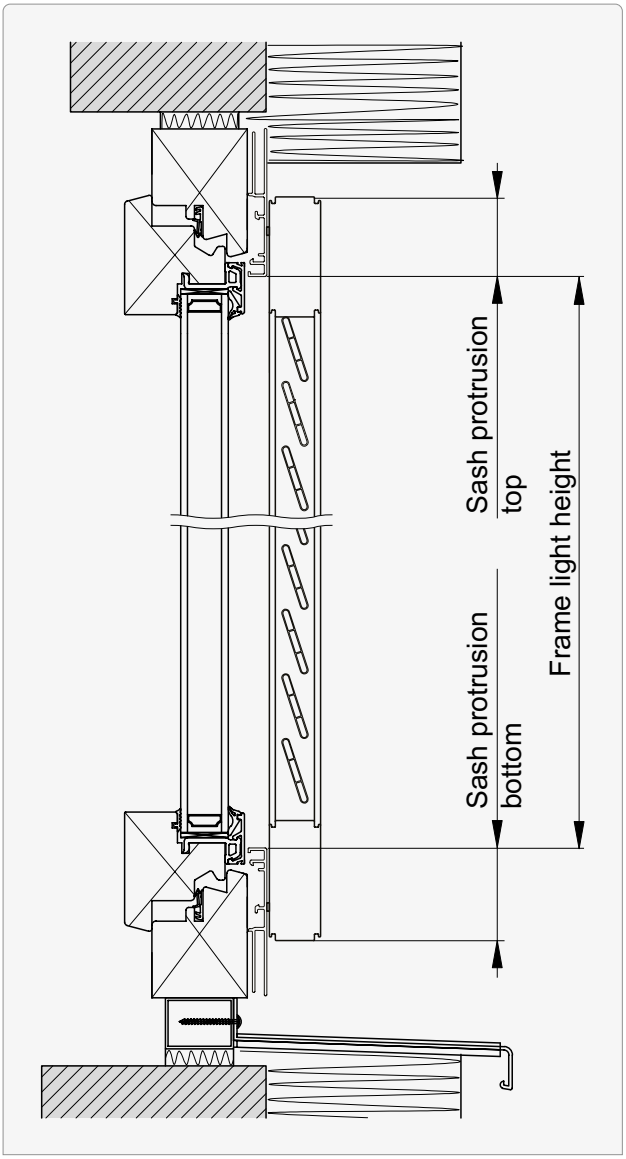


### Horizontal section

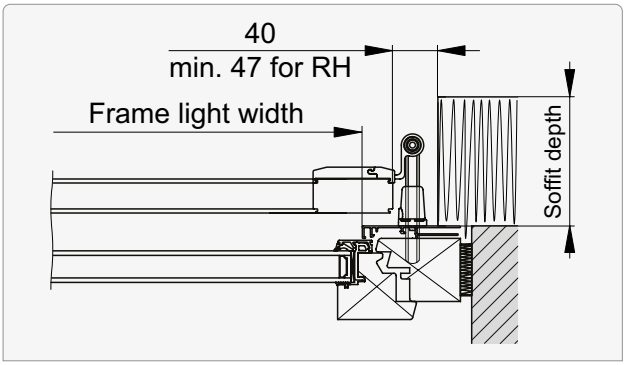


Sections | Details ..... 142

## Mounting situation for blind installation

### Vertical section: Type 1

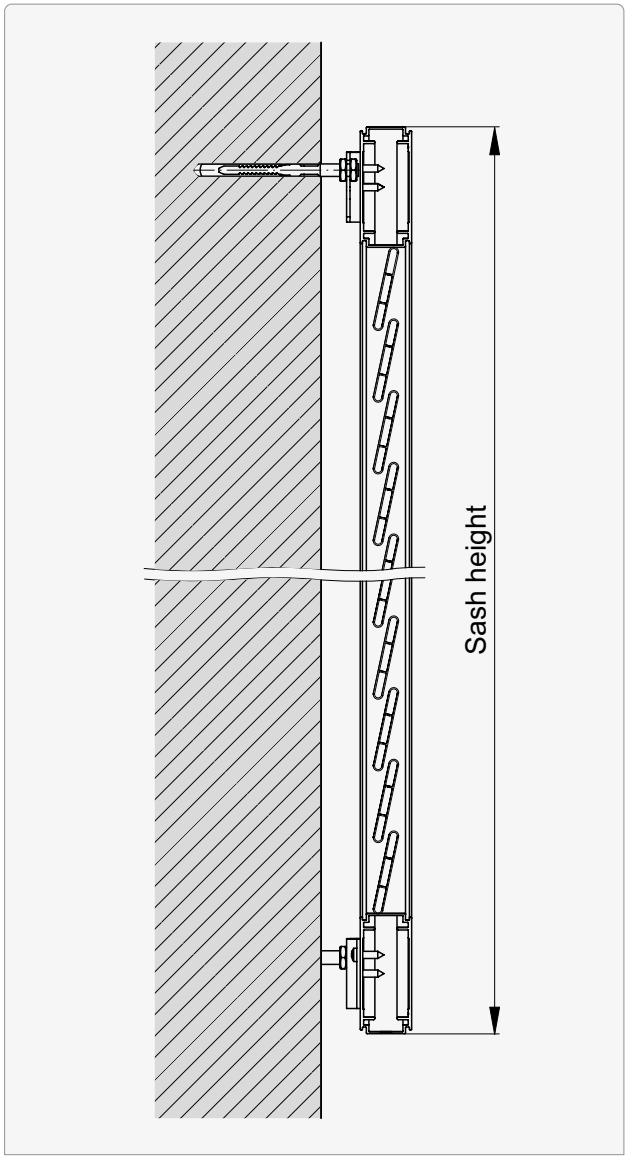


### Vertical section: Type 2

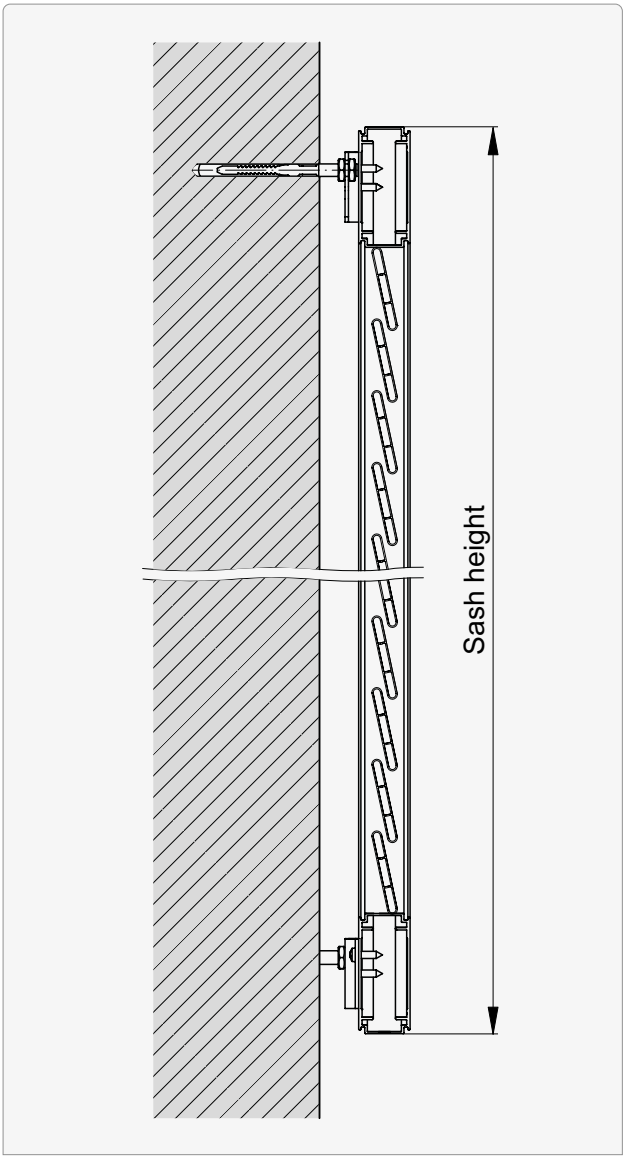


Sections | Details ..... 148

## Sash types

### Fixed slats

A EZ R T

Model A

Model EZ

Model R

Model T

## Sash types

### Movable slats

B E

**Model B**

**Model E (Heritage Home)**

## Sash types

### Closed models

C CH F G ISO

Model C

Model CH

Model F

Model G ISO

## Sections | Details: Wall mounting

### Horizontal section: Shutter rabbet

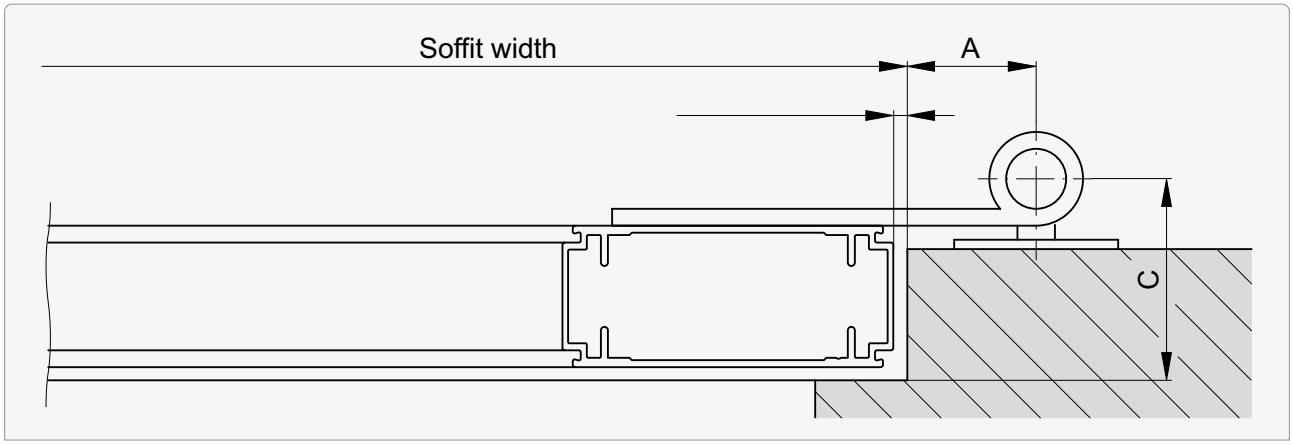


| A | C | Belt offset |
|---|---|---|
| 15 – 65 | 27 – 32 | - 6 |
| | 33 – 36 | 0 |
| | 37 – 42 | 4 |
| | 43 – 46 | 10 |
| | 47 – 55 | 14 |
| | 56 – 62 | 23 |
| | 63 – 67 | 30 |

| A | C | Belt offset |
|---|---|---|
| 15 – 65 | 68 – 72 | 35 |
| | 73 – 77 | 40 |
| | 78 – 82 | 45 |
| | 83 – 87 | 50 |
| | 88 – 92 | 55 |
| | 93 – 97 | 60 |

All calculations valid for frame profile thickness of 30 without rebate bar

### Horizontal section: In the soffit

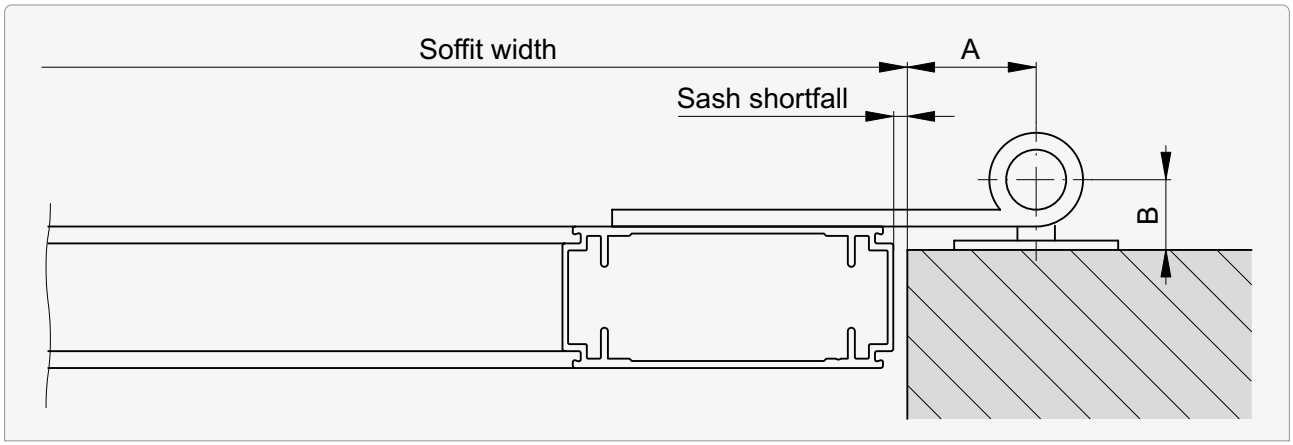


| A | B | Belt offset |
|---|---|---|
| 15 – 65 | – 11 | 4 |
| | 12 – 15 | 10 |
| | 16 – 24 | 14 |
| | 25 – 31 | 23 |
| | 32 – 36 | 30 |
| | 37 – 41 | 35 |

| A | B | Belt offset |
|---|---|---|
| 15 – 65 | 42 – 46 | 40 |
| | 47 – 51 | 45 |
| | 52 – 56 | 50 |
| | 57 – 61 | 55 |
| | 62 – 66 | 60 |

All calculations valid for frame profile thickness of 30 without rebate bar

## Sections | Details: Wall mounting

### Horizontal section: On the soffit

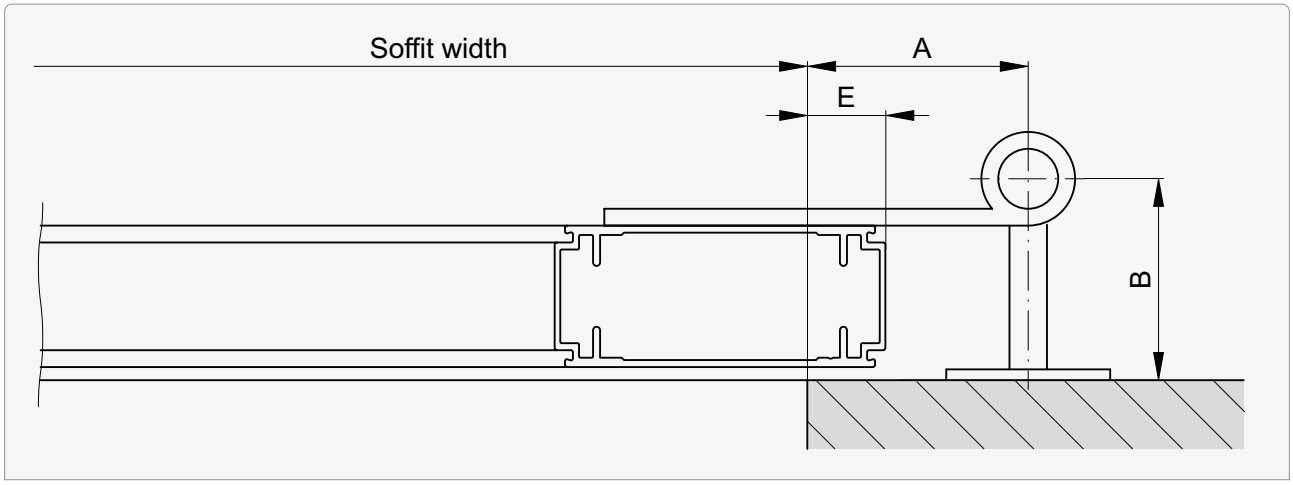


| A | B | E* | Belt offset |
|---|---|---|---|
| 15 – 65 | 32 – 36 | 5 – 30 | 30 |
| | 37 – 41 | | 35 |
| | 42 – 46 | | 40 |
| | 47 – 51 | | 45 |

| A | B | E* | Belt offset |
|---|---|---|---|
| 15 – 65 | 52 – 56 | 5 – 30 | 50 |
| | 57 – 61 | | 55 |
| | 62 – 66 | | 60 |

All calculations valid for frame profile thickness of 30 without rebate bar

* Dimension E depends on dimension A

## Sections | Details: Screen frame Mounting

### Vertical section

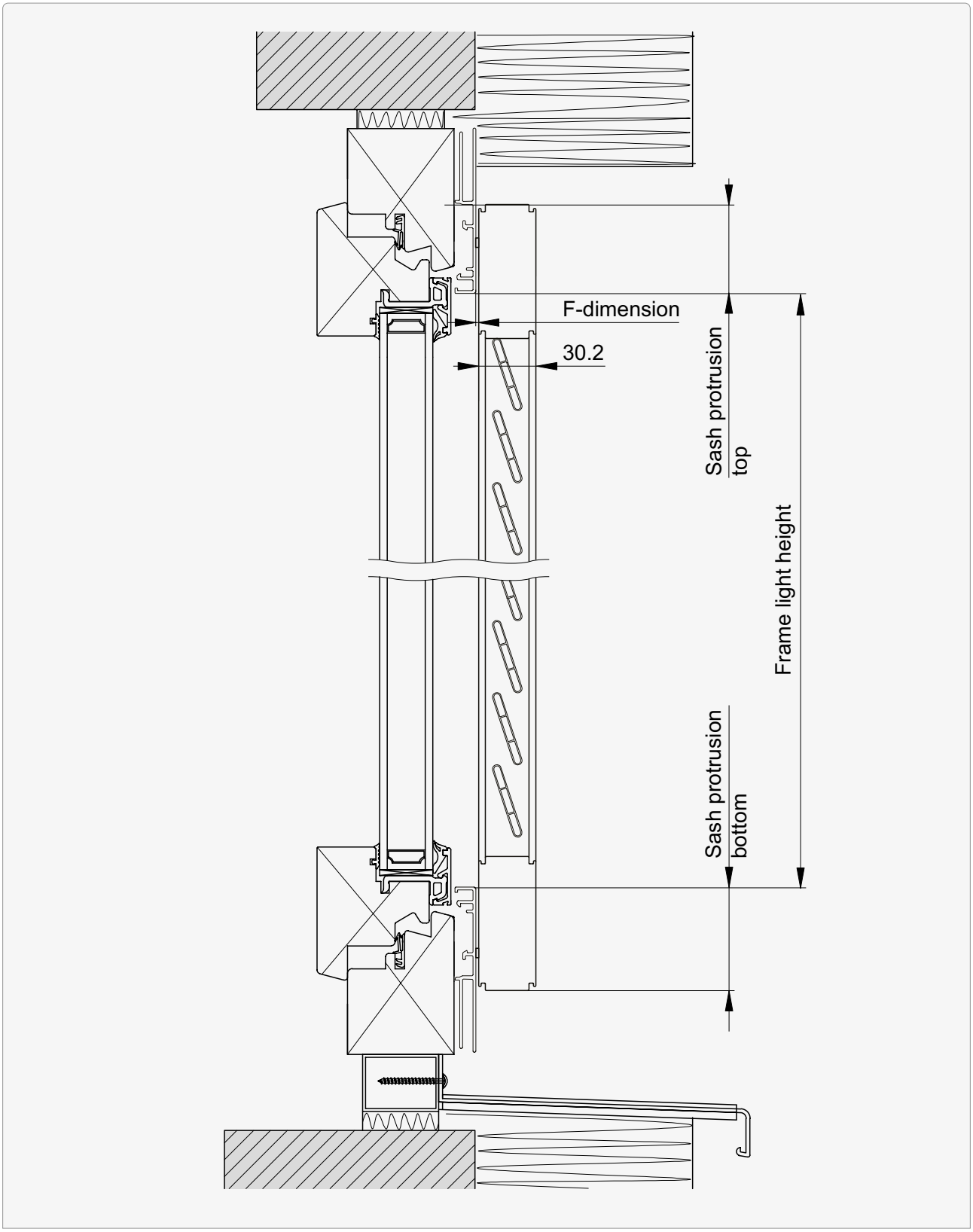


**F**

Standard: 1.5

## Sections | Details: Screen frame Mounting

### Horizontal section

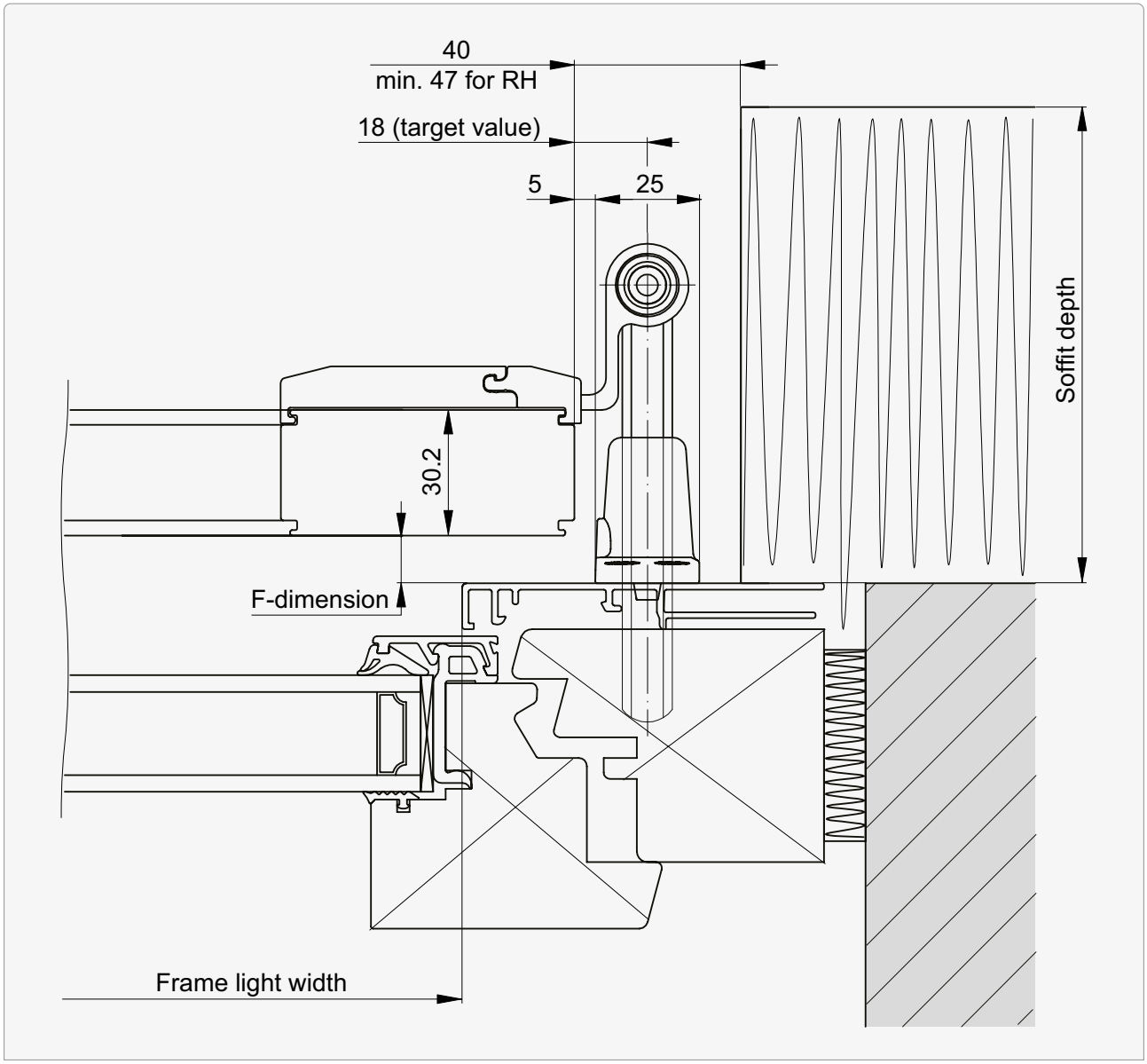


| F |
| --- |
| Standard: 1.5 |

## Sections | Details: Clamp and belt calculation for screen frame installation

### Horizontal section: Schemes 1L | 1R

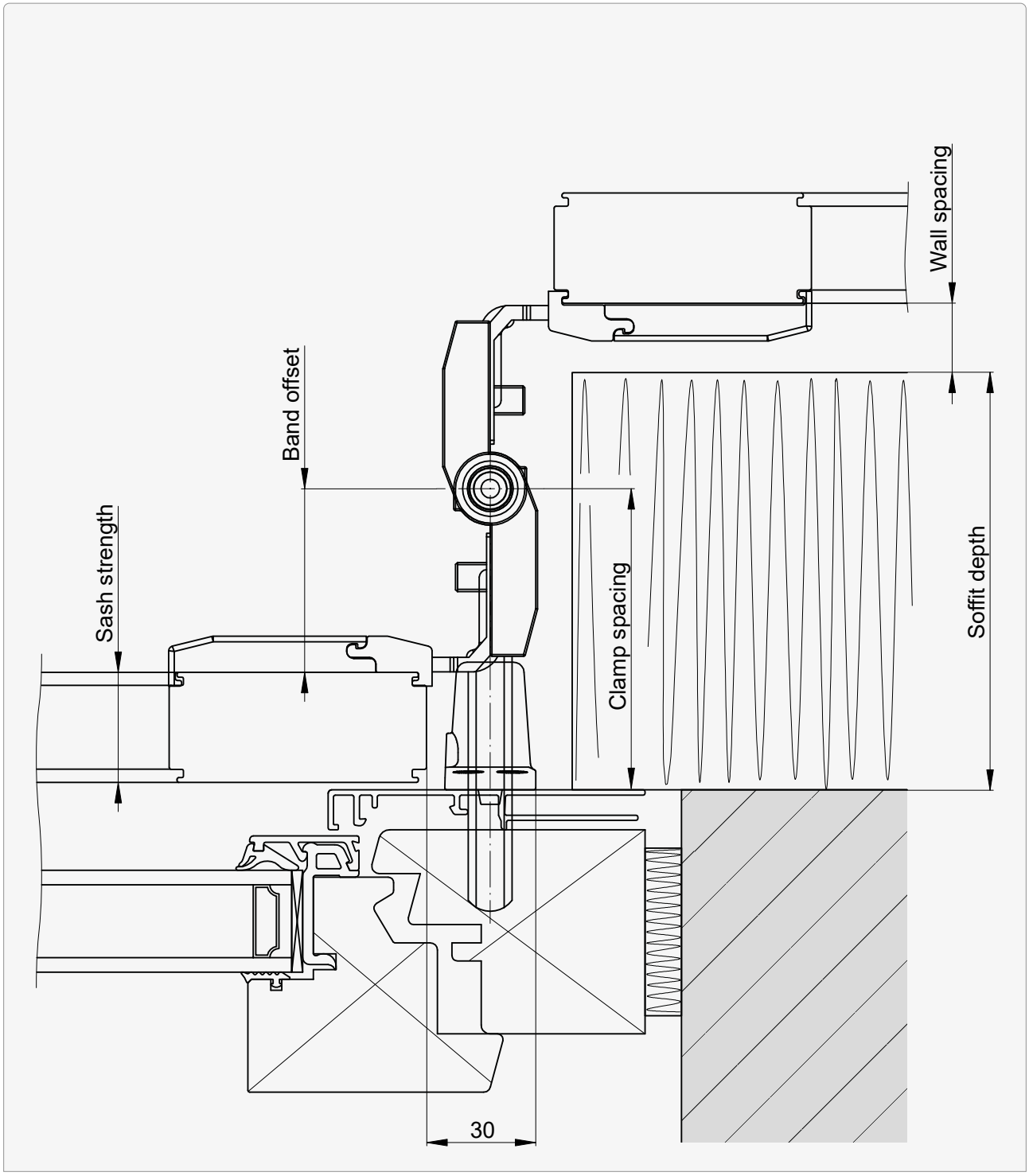


$$\text{Clamp spacing} = \frac{\text{Soffit depth} + \text{Wall spacing} + \text{Sash strength}}{2}$$

$$\text{Belt offset} = \frac{\text{Soffit depth} + \text{Wall spacing} - \text{Sash strength}}{2}$$

## Sections | Details: Clamp and belt calculation for screen frame installation

### Horizontal section: Schemes with double panels L | R

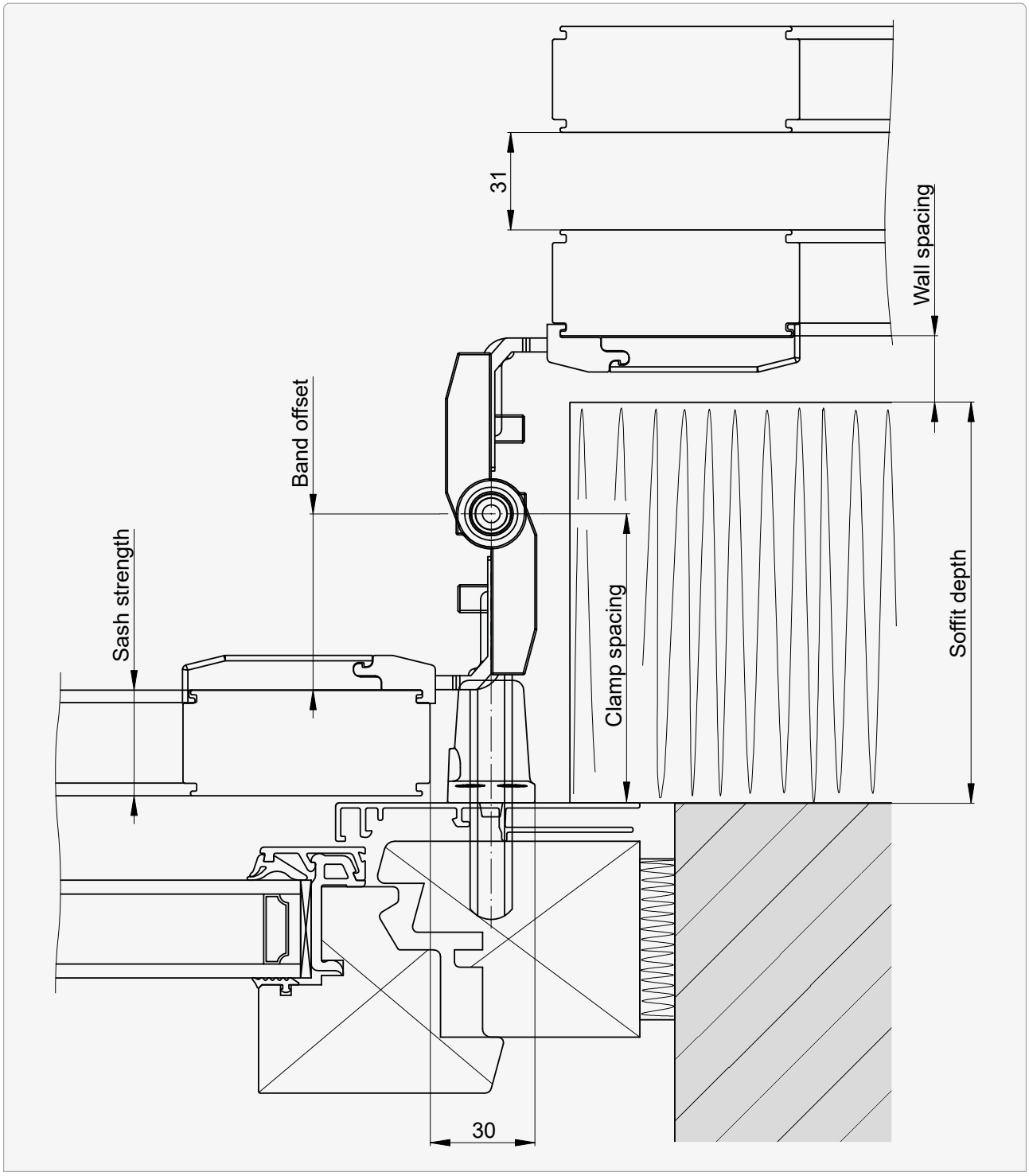


$$\text{Clamp spacing} = \frac{\text{Soffit depth} + \text{Wall spacing} + \text{Sash strength}}{2}$$

$$\text{Belt offset} = \frac{\text{Soffit depth} + \text{Wall spacing} - \text{Sash strength}}{2}$$

## Sections | Details: Clamp and belt calculation for screen frame installation

### Horizontal section: Schemes with double panels LA | RA

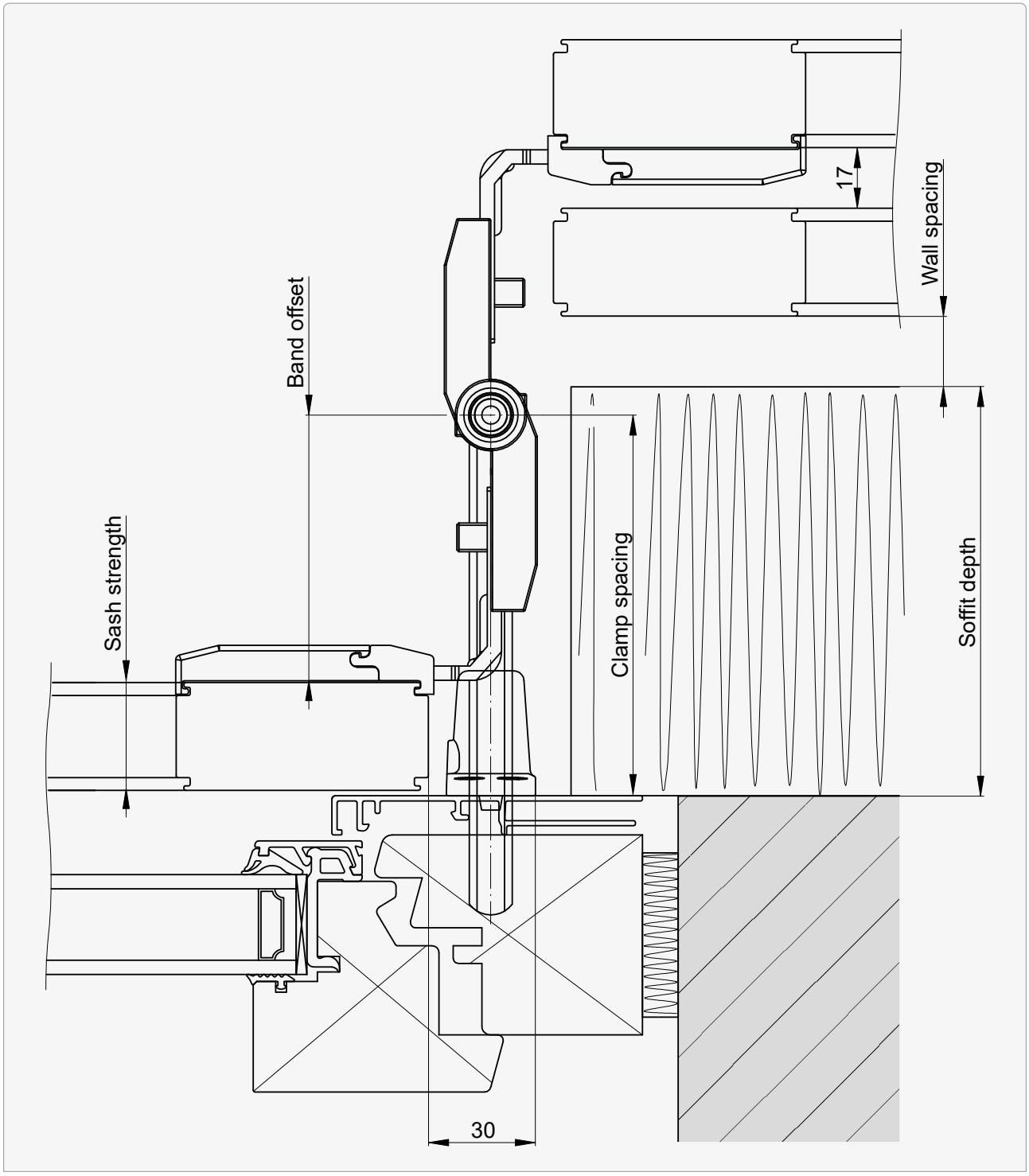


$$\text{Clamp spacing} = \frac{\text{Soffit depth} + \text{Wall spacing} + \text{Sash spacing} + 2\text{x Sash strength}}{2}$$

$$\text{Belt offset} = \frac{\text{Soffit depth} + \text{Wall spacing} + \text{Sash spacing}}{2}$$

## Sections | Details: Blind installation

### Outside view | Sections

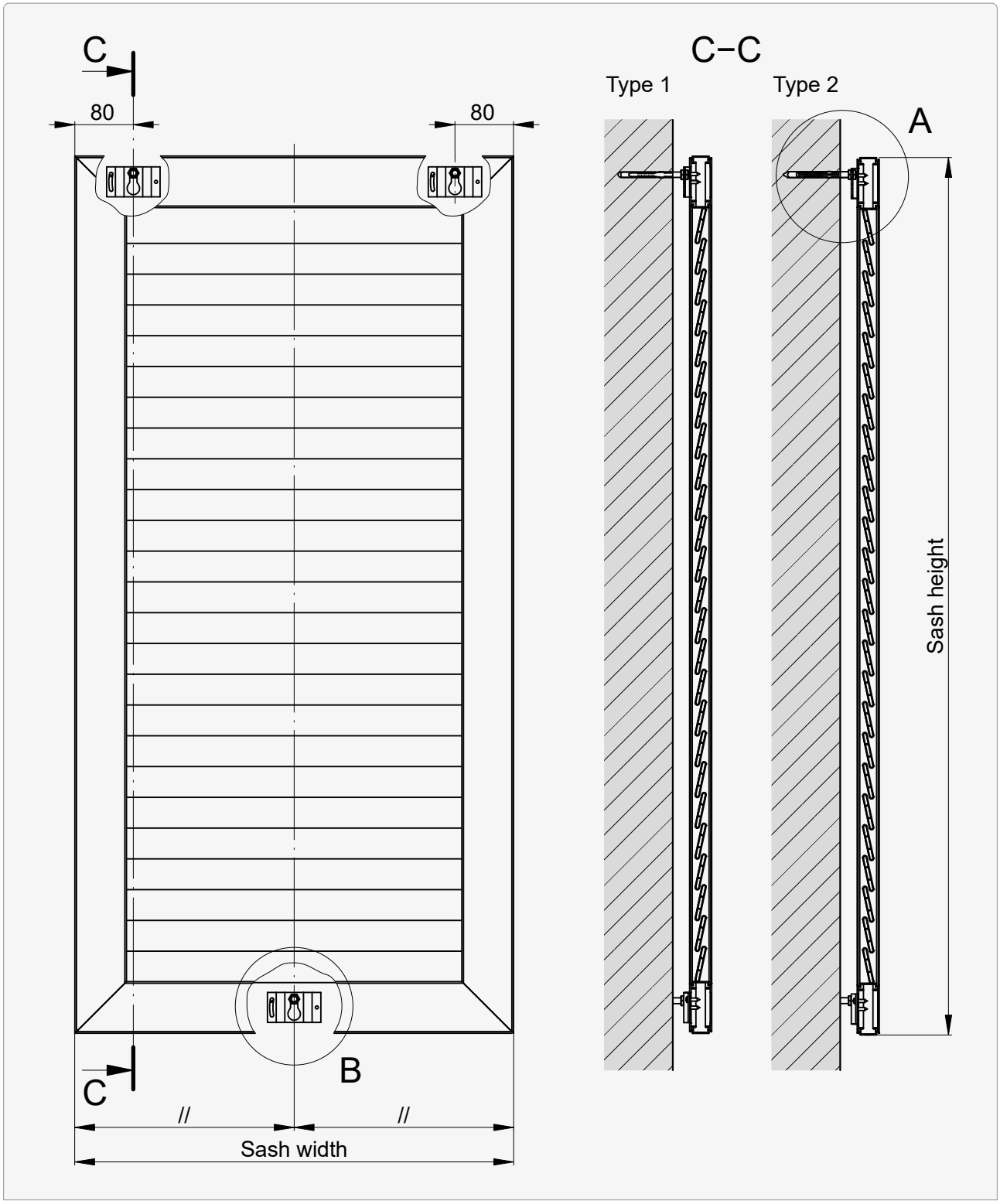


Details A and B ..... 149

## Sections | Details: Blind installation

### Detail A

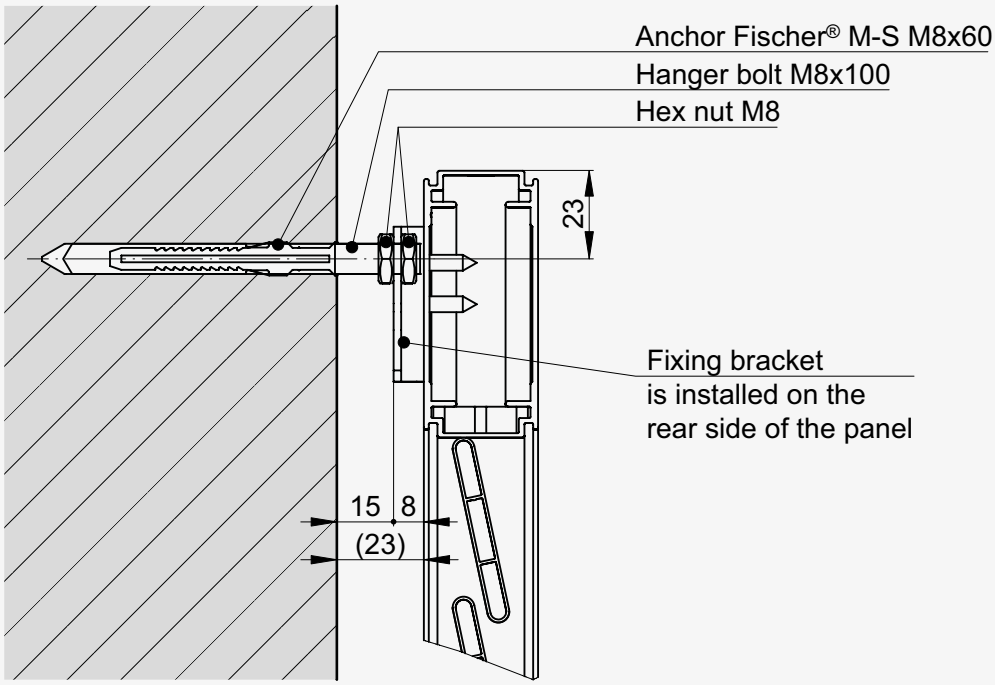


### Detail B

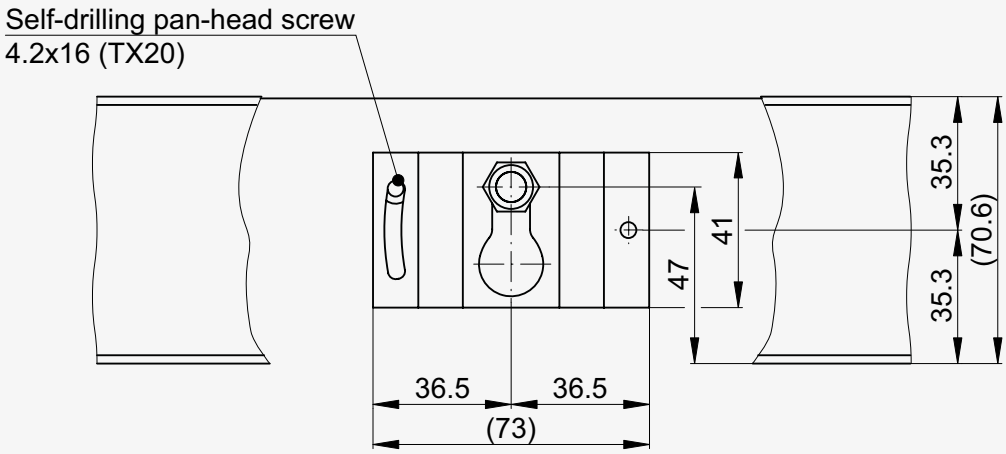

## End stop diagrams

### Scheme 1L

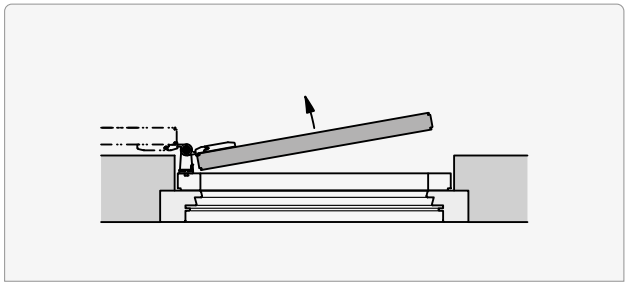

### Scheme 1R

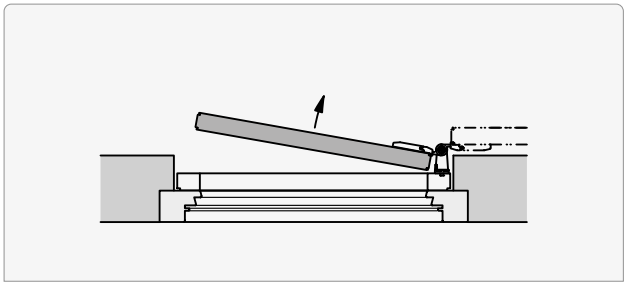

### Scheme 2

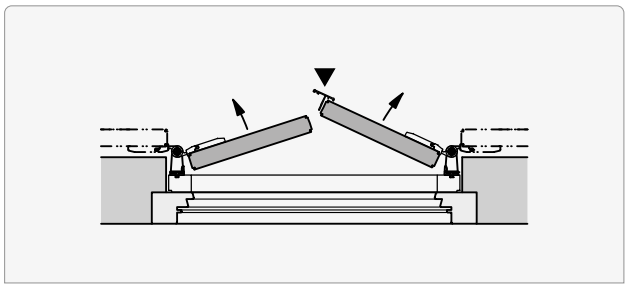

### Scheme 2S

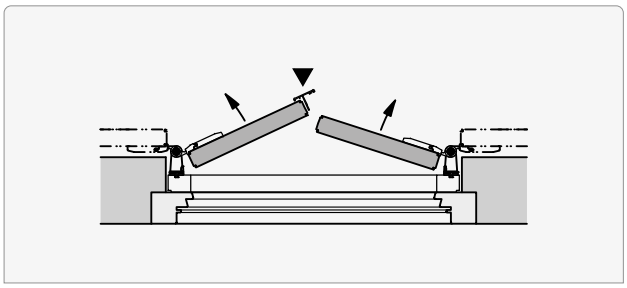

### Scheme 2L

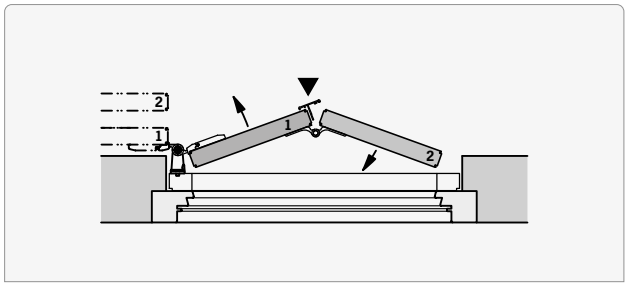


### Scheme 2R

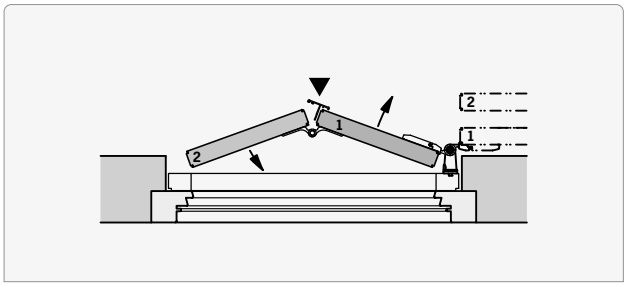


### Scheme 2LA

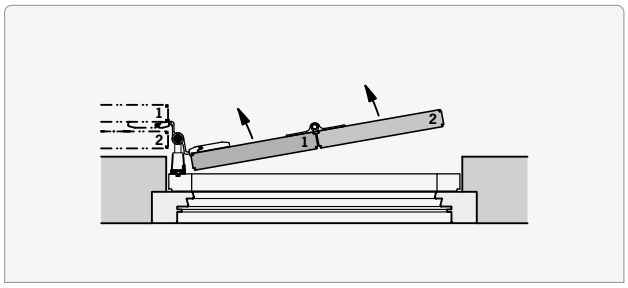


### Scheme 2RA

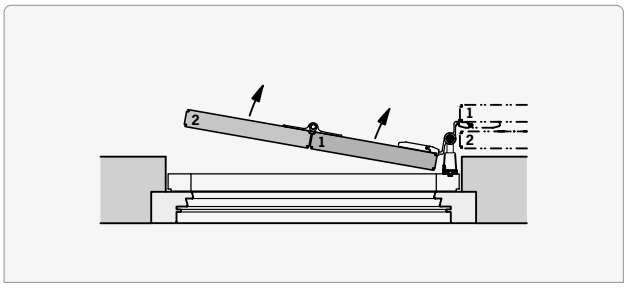


▼ Baffle plate

Limit dimensions ..... 130

## End stop diagrams

### Scheme 3L

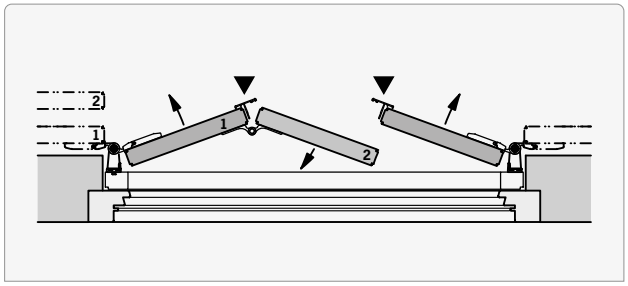

### Scheme 3R

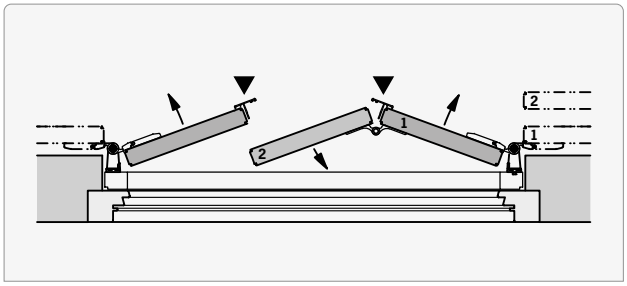

### Scheme 3LA

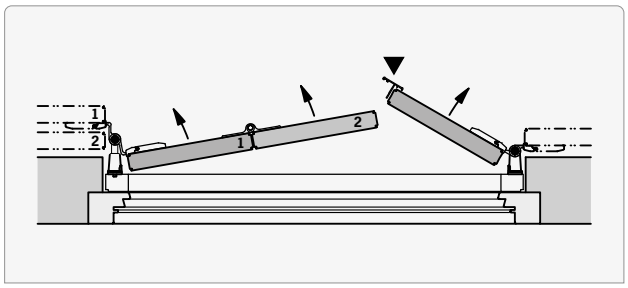

### Scheme 3RA

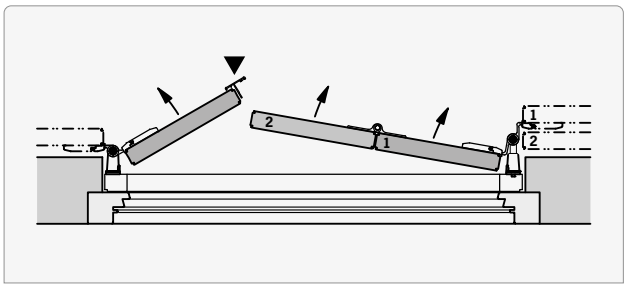

### Scheme 4

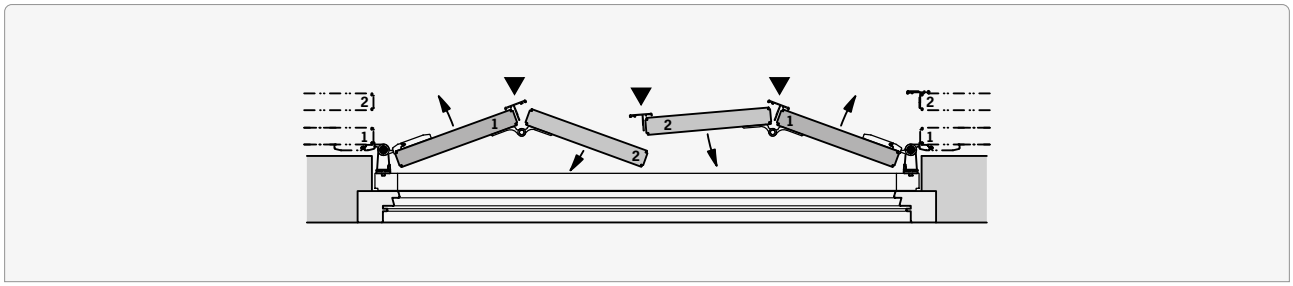

### Scheme 4A

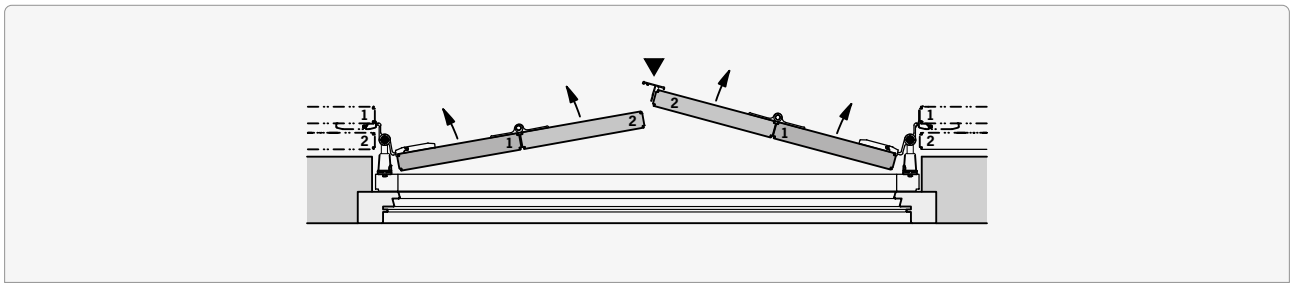

▼ Baffle plate

Limit dimensions ..... 130

## Piston positions with JustierFix

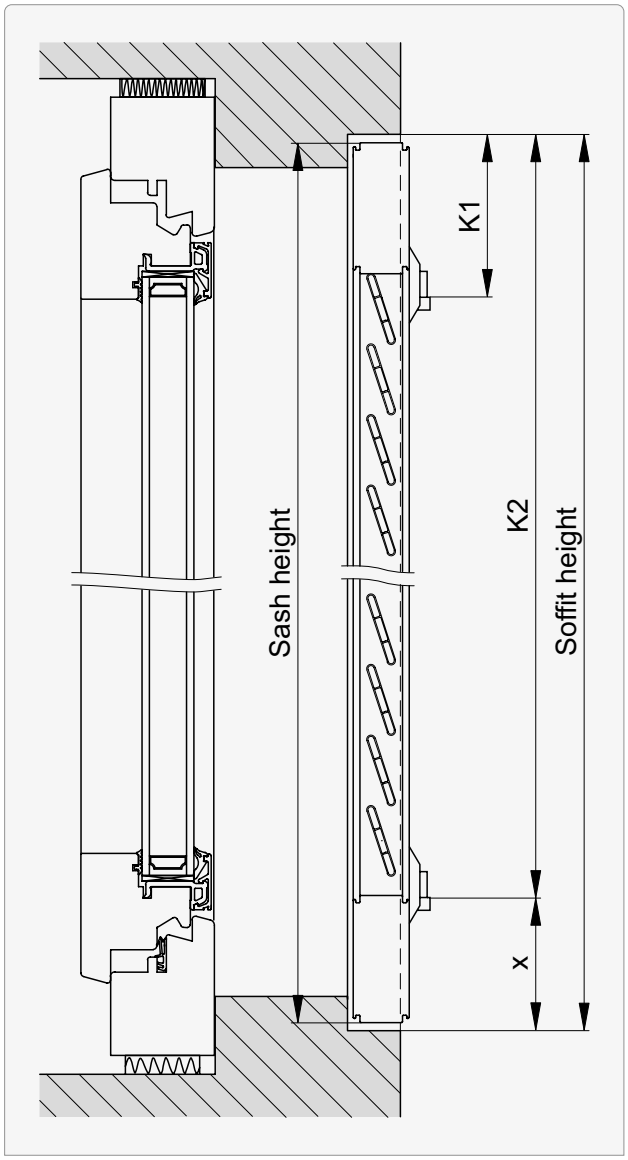


| K1 | x (soffit height – K2) |
|---|---|
| 130…600 | 90…555 |

## Dimensions

### Horizontal frieze

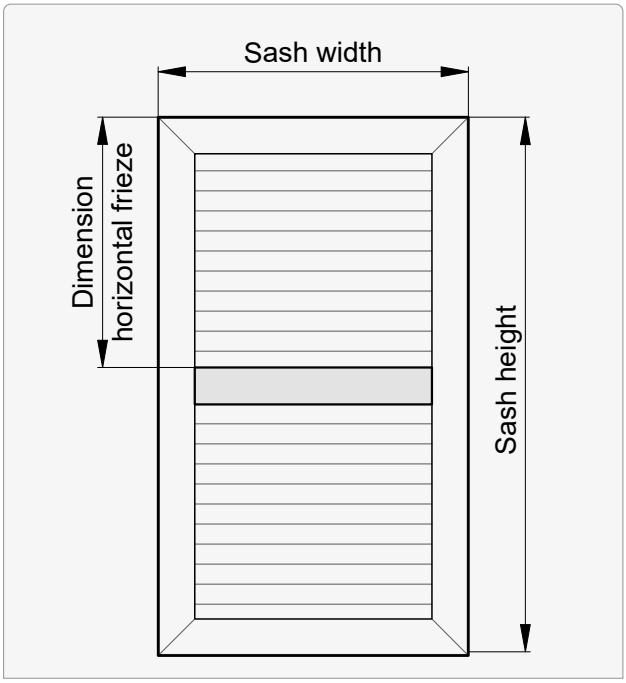


| Horizontal frieze dimension min. |
|---|
| 300 |

### Tubtara rivet

Adjustment lever B

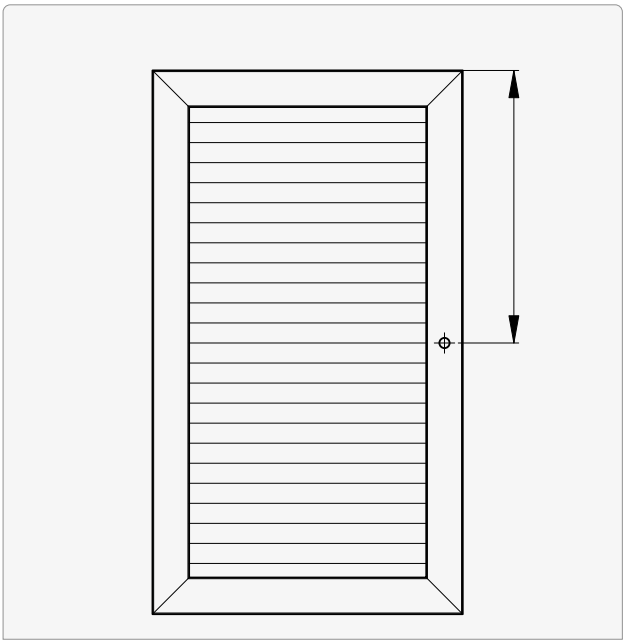

### Bar at top and bottom

F G ISO

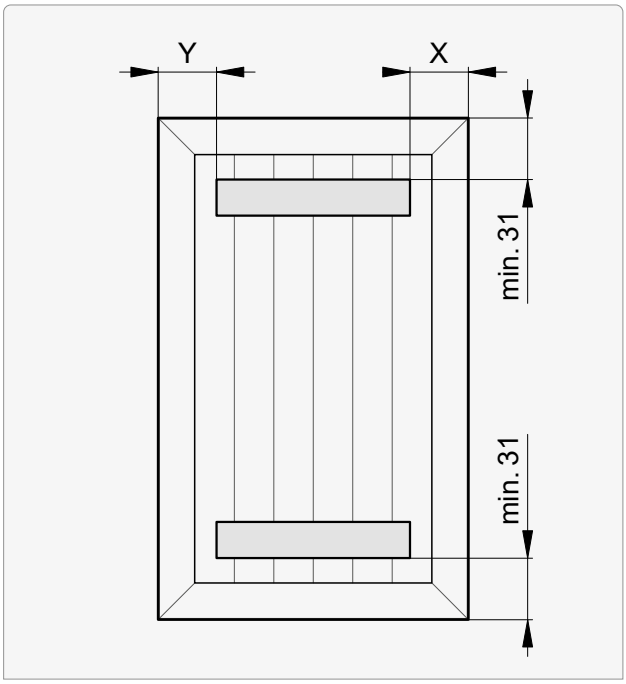


| x | y |
|---|---|
| 60 (Standard) | 60 (Standard) |

### Bar z-shaped

F G ISO

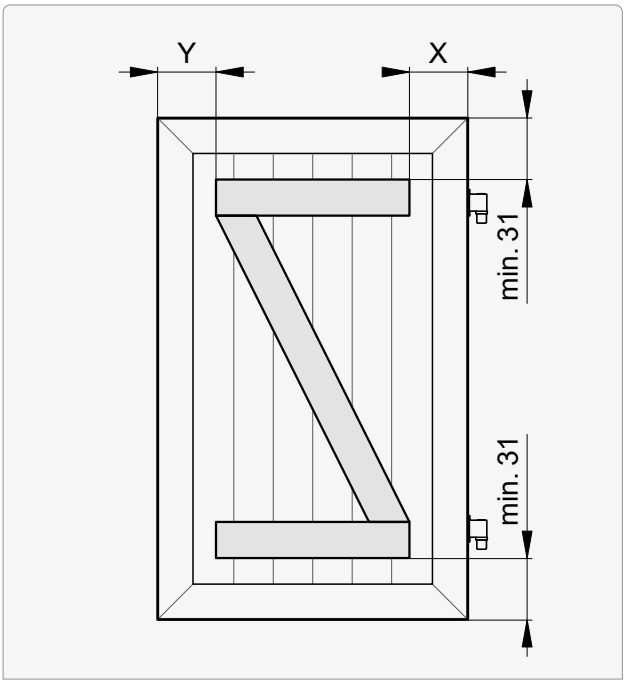


| x | y |
|---|---|
| | |

## Clamp

### Screw clamp

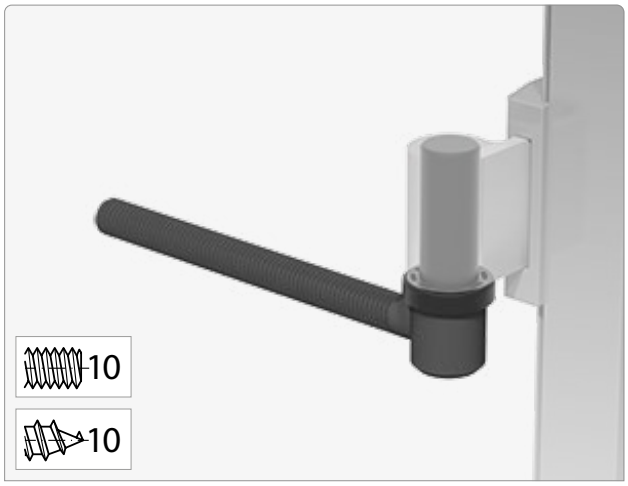


### Plate piston

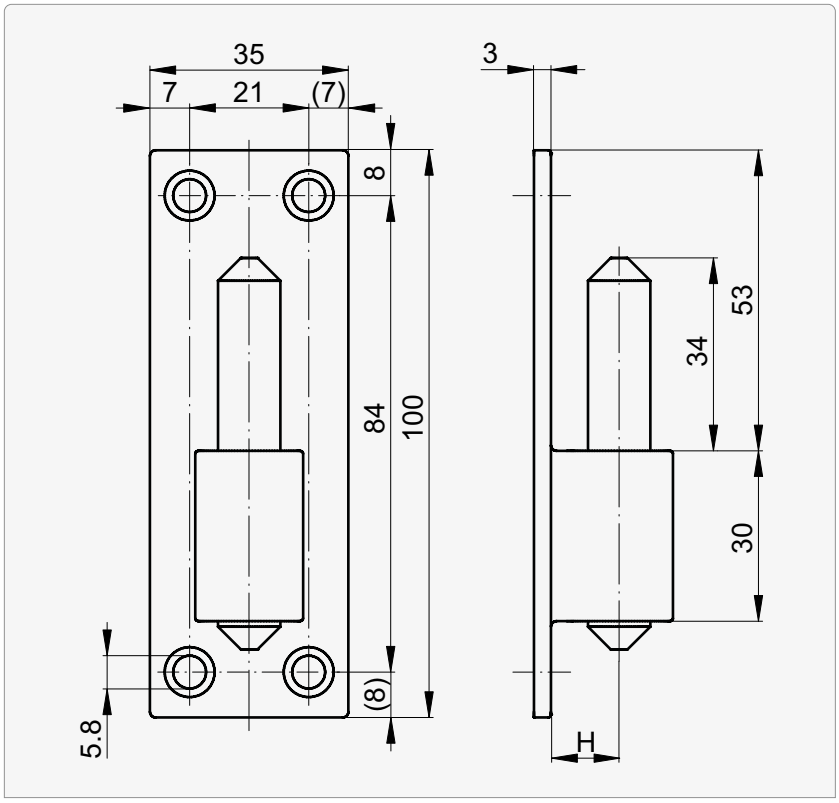


| H | | | | | | |
|---|---|---|---|---|---|---|
| 12 | 23 | 30 | 35 | 40 | 45 | 50 |

## Clamp

### Universal clamp

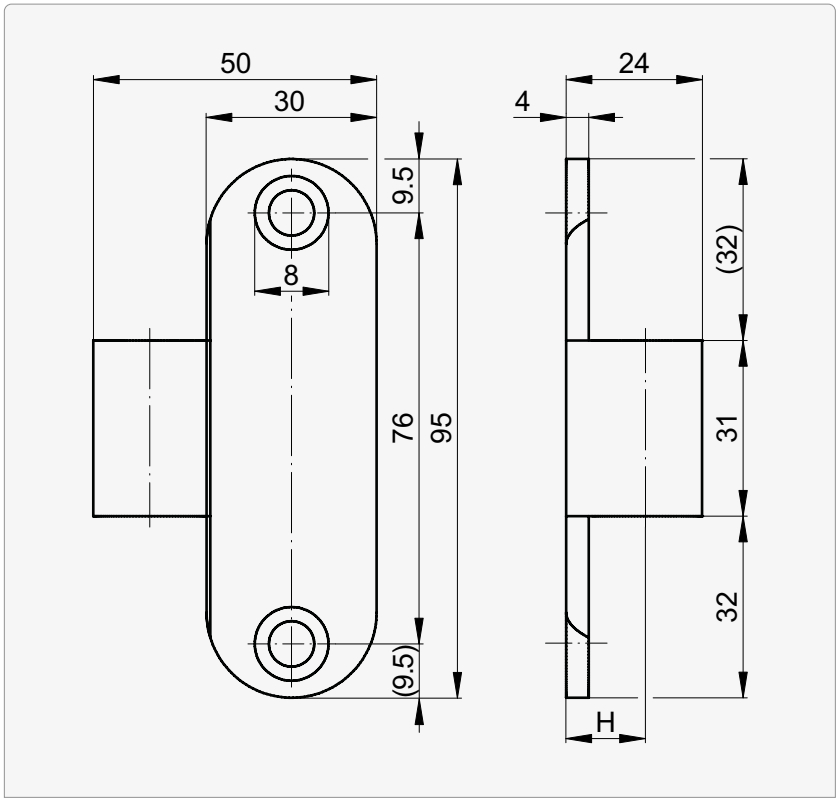


| H | | | |
|---|---|---|---|
| 14 | 24 | 35 | 45 |

### Polygond

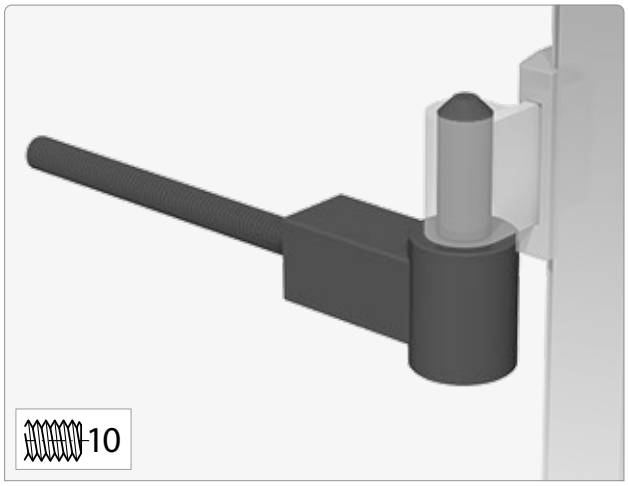


### Screen frame piston

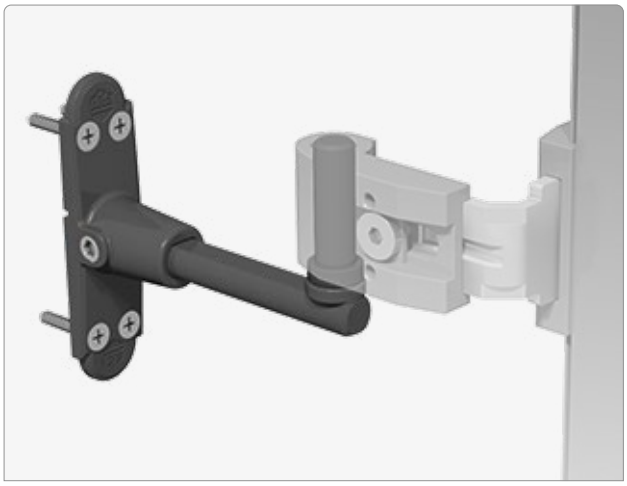

## Bands

### Systemfix Alu | External wall installation

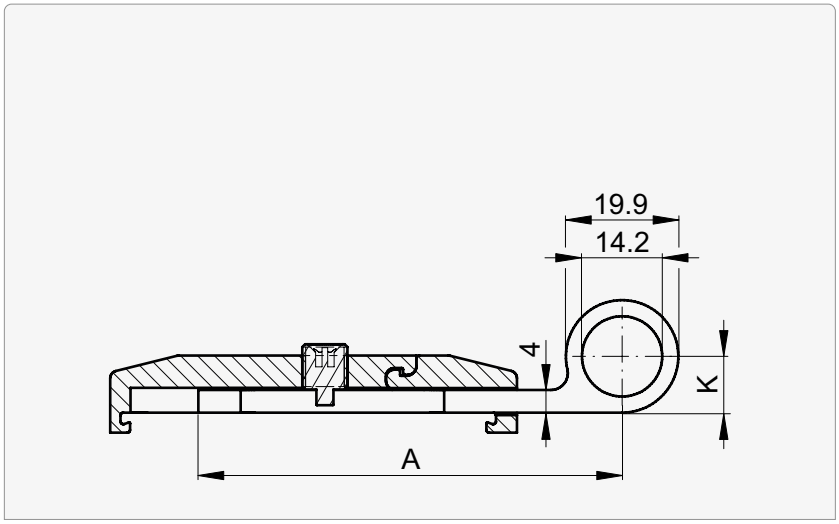


| A | K | | | | | | | | | | | |
|---|---|---|---|---|---|---|---|---|---|---|---|---|
| 80 ... 130 | –6 | 0 | 4 | 10 | 14 | 23 | 30 | 35 | 40 | 45 | 50 | 55 | 60 |

### Systemfix Steel | External wall installation

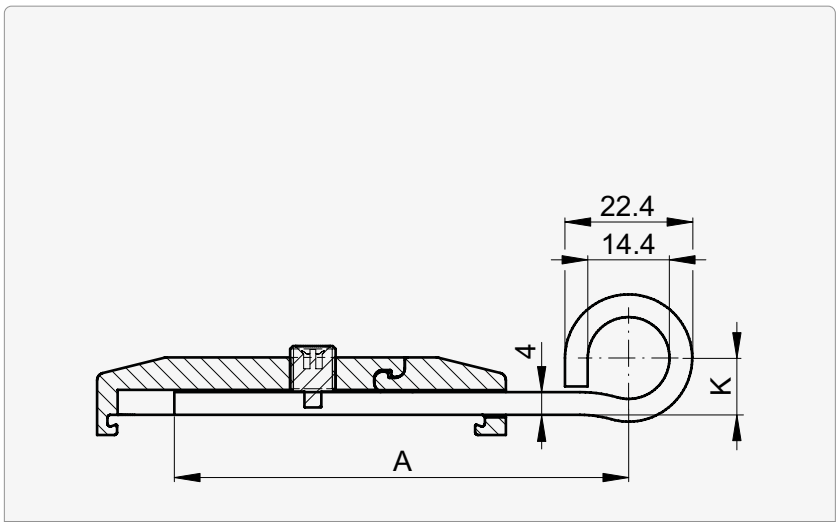


| A | K | | | | | | | | | | | |
|---|---|---|---|---|---|---|---|---|---|---|---|---|
| 80 ... 130 | –6 | 0 | 4 | 10 | 14 | 23 | 30 | 35 | 40 | 45 | 50 | 55 | 60 |

**A** Belt length
**K** Offset

## Bands

### Systemfix | Screen frame installation

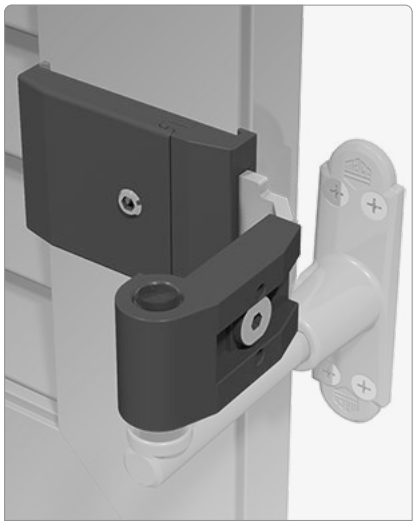

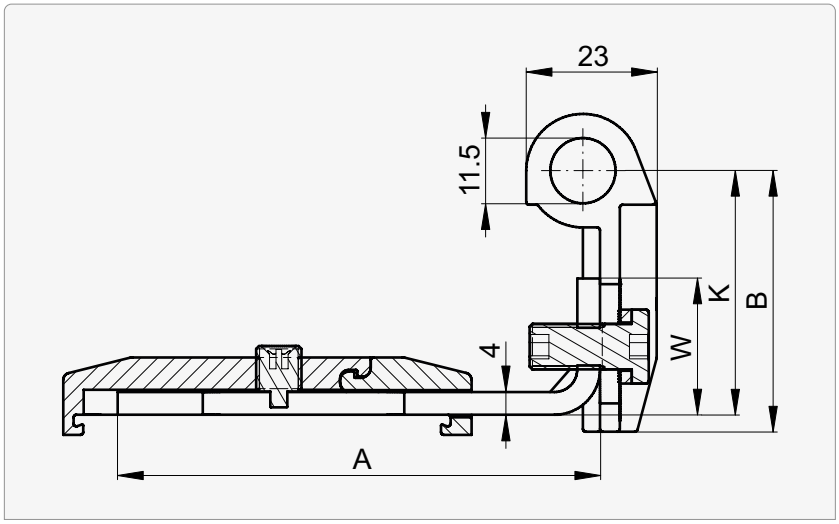


| A | K | | | |
|---|---|---|---|---|
| | Size 0 | Size 1 | Size 2 | Size 3 |
| 80 | 25 – 51 | 35 – 60 | 57 – 82 | 74 – 99 |

### Justierfix Alu | External wall installation

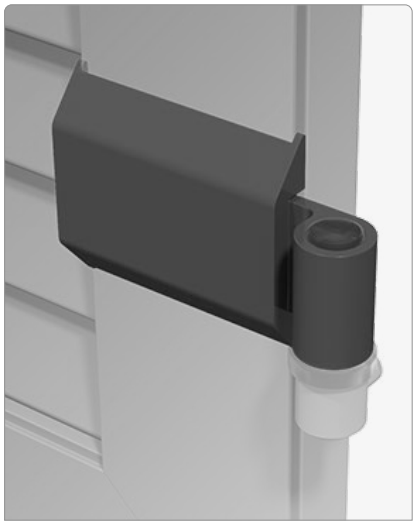

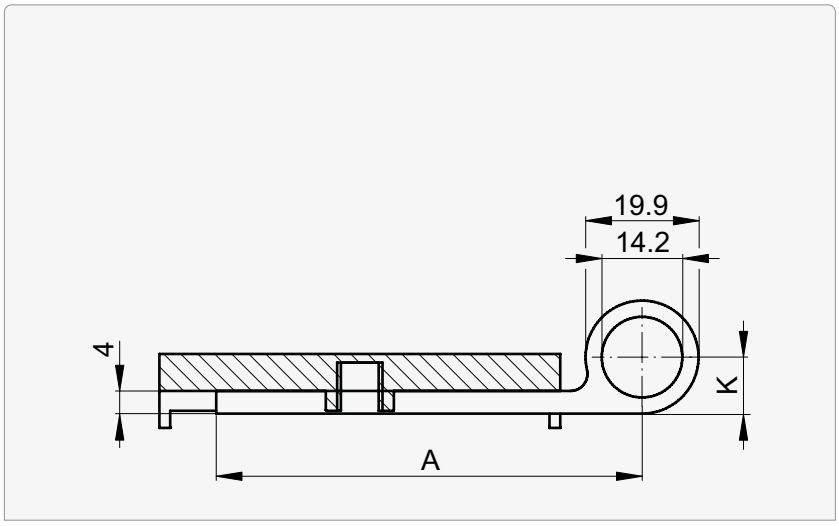


| A | K | | | | | | | | | | | |
|---|---|---|---|---|---|---|---|---|---|---|---|---|
| 80 ... 130 | –6 | 0 | 4 | 10 | 14 | 23 | 30 | 35 | 40 | 45 | 50 | 55 | 60 |

**A** Belt length
**B** Deflection pulley dimension
**K** Offset
**W** Measurement angle

## Bands

### Justierfix Steel | External wall installation

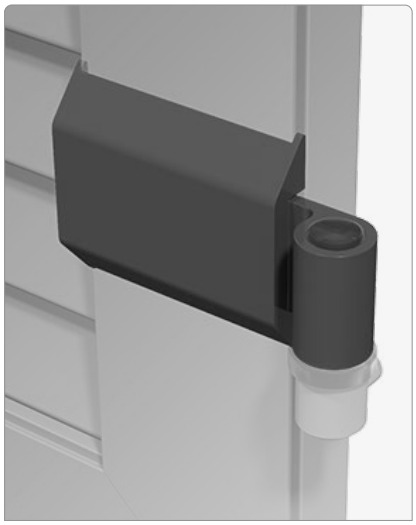

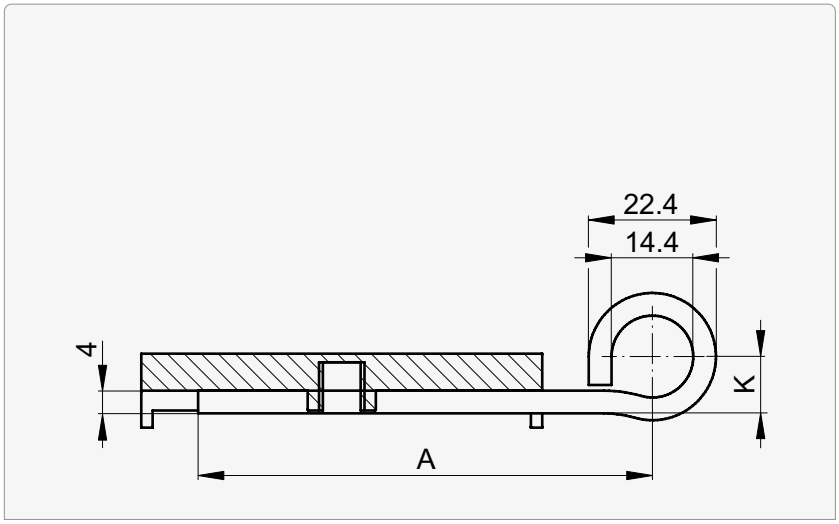


| A | K | | | | | | | | | | | |
|---|---|---|---|---|---|---|---|---|---|---|---|---|
| 80 ... 130 | –6 | 0 | 4 | 10 | 14 | 23 | 30 | 35 | 40 | 45 | 50 | 55 | 60 |

**A** Belt length
**K** Offset

## Bands

### Long band | straight

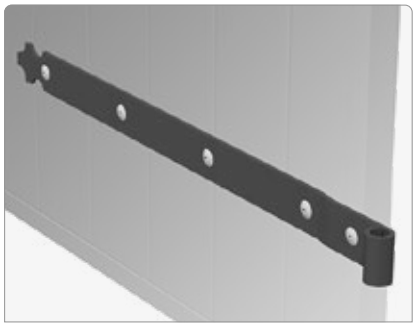

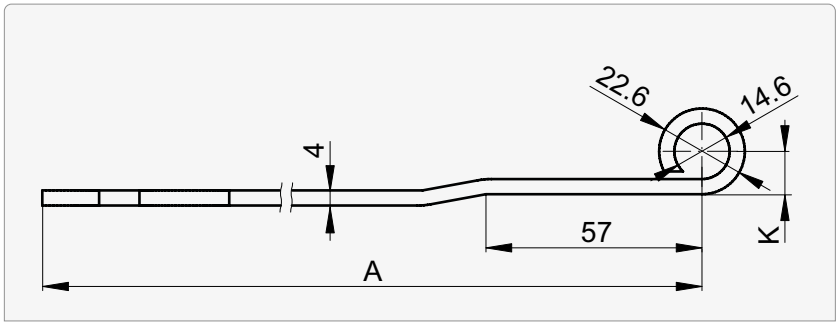


| K |
|---|
| 11 |

### Long band | special

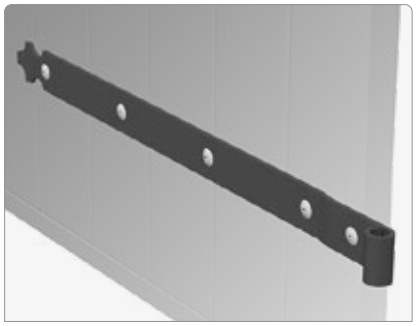

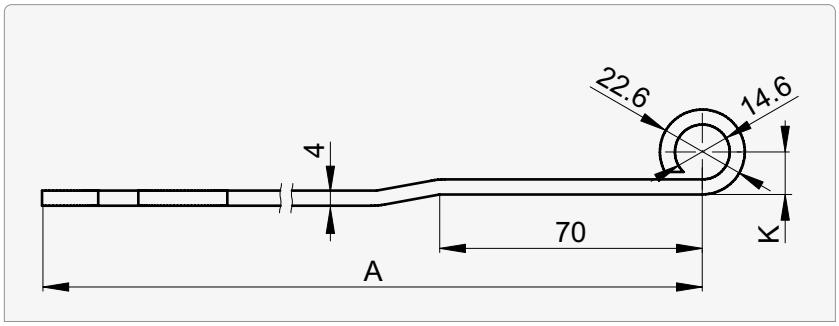


| K |
|---|
| 11 |

### Long band | cranked

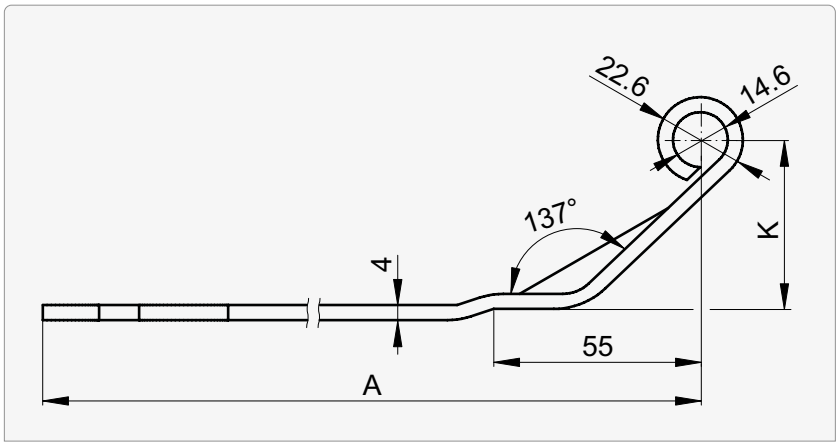


**A** Belt length
**K** Offset

| K |
|---|
| 45 |

## Retention elements

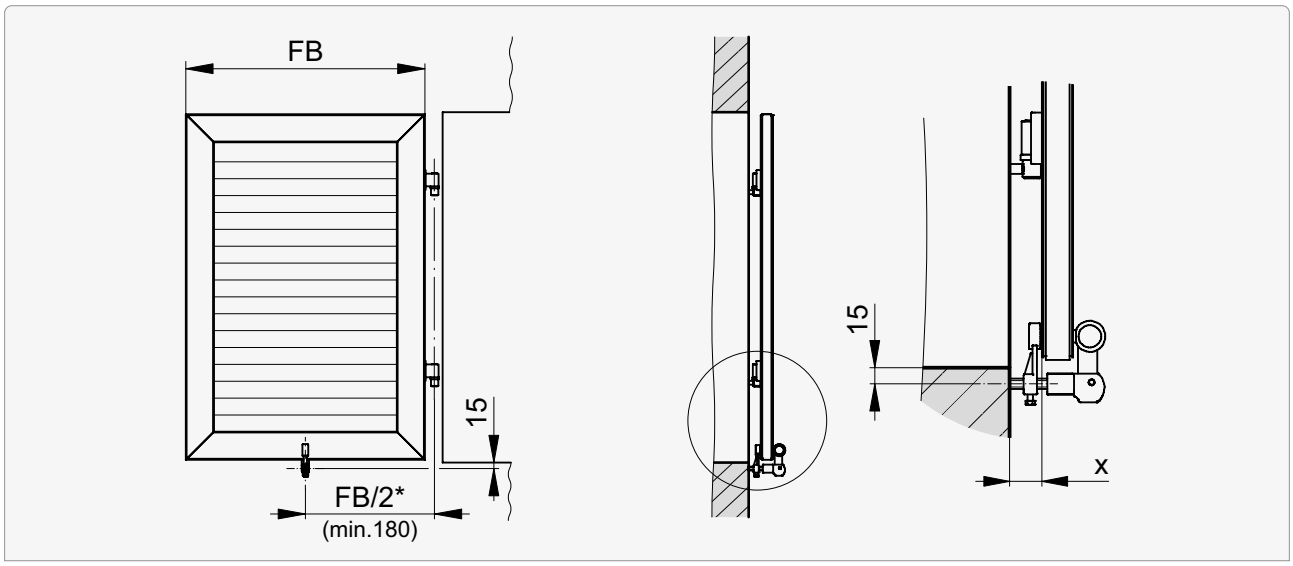


**FB** Sash width

### Shutter holder

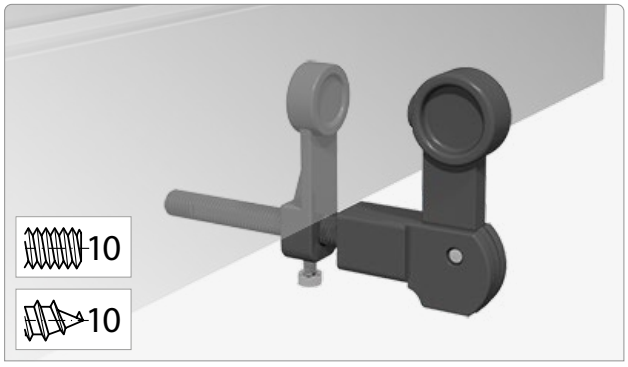


| X |
|---|
| 25 |

### Lady's head

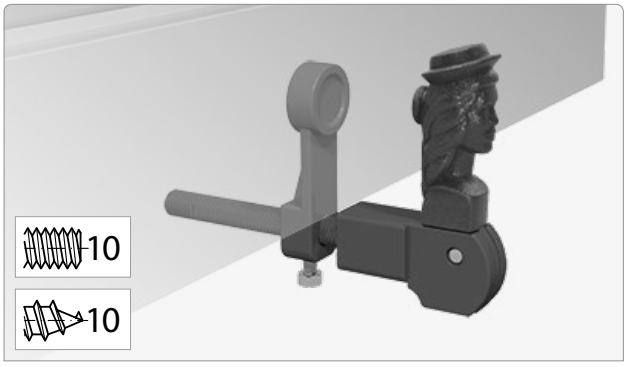


| X |
|---|
| 25 |

### Shutter latch

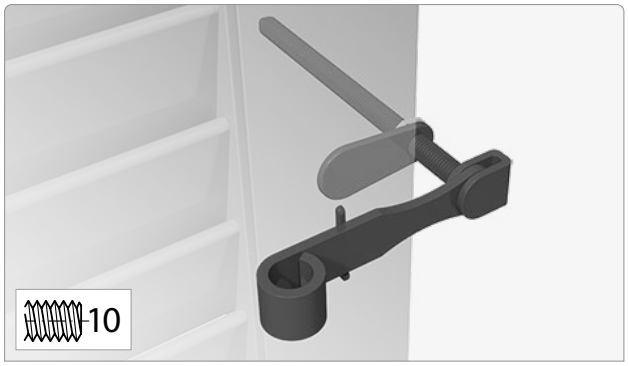


| X |
|---|
| 25 |

### Shutter latch Marseille

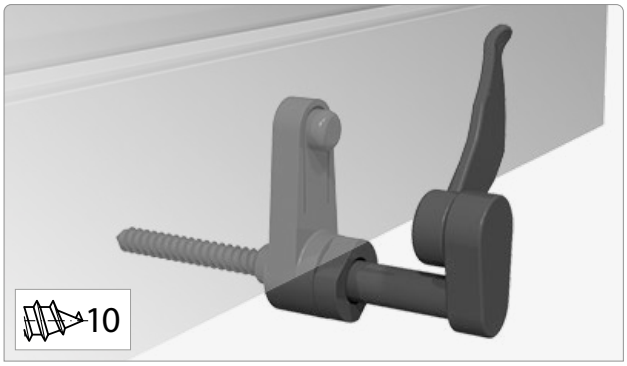


| X |
|---|
| 25 |

## Retention elements

### Shutter holder, automatic

| X |
|---|
| 25 |

### Door casement holder

| X |
|---|
| 30* |

* with fitting carrier: 35

## Retention elements

### Convenience casement holder

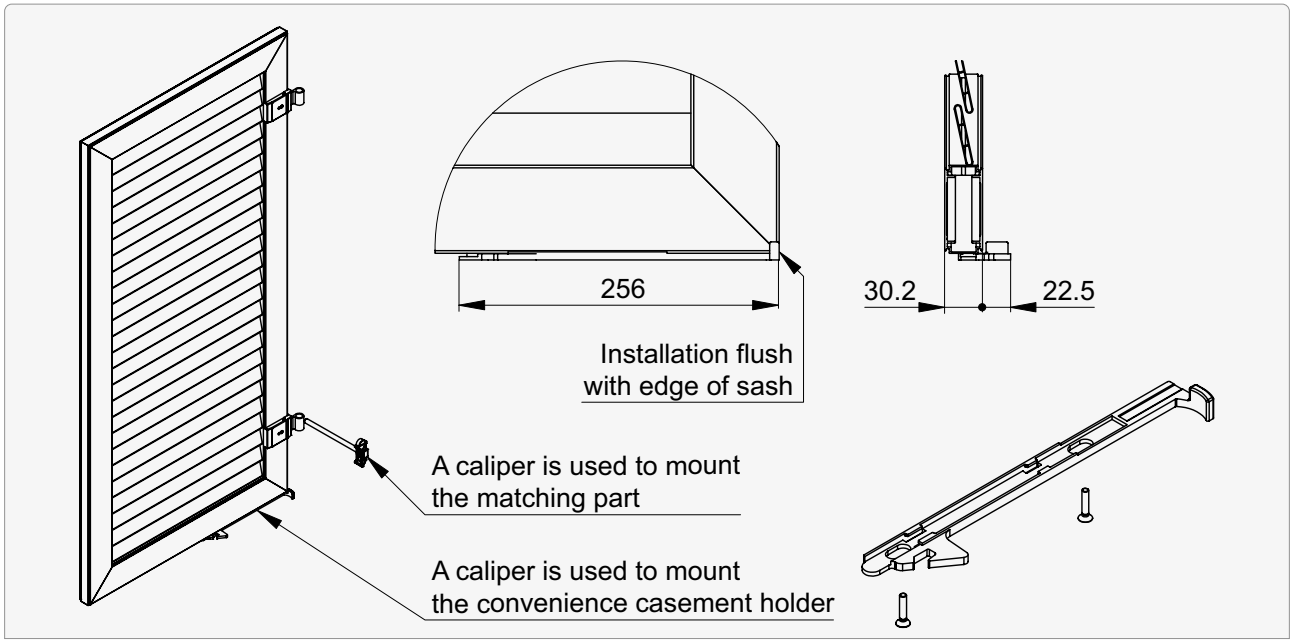


**Type 1 | Standard window**

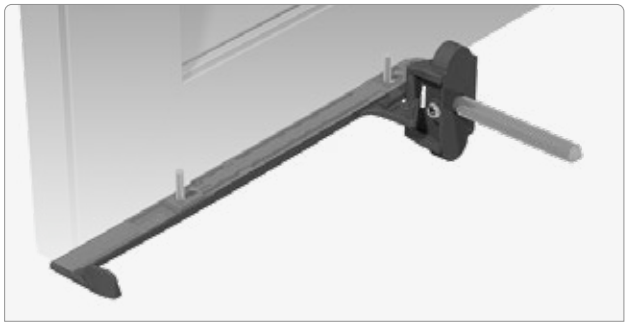

| X |
|---|
| 30 |

**Type 2 | Option window**

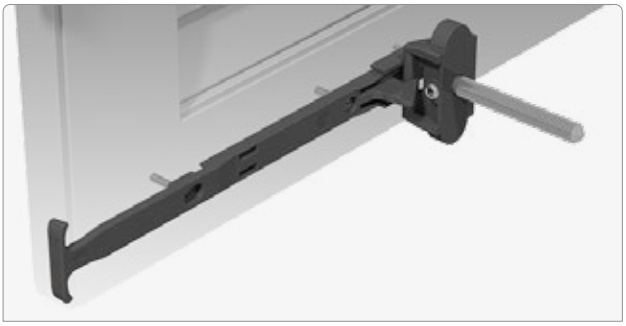

| X |
|---|
| 30; 35 with fitting carrier |

**Type 3 | Standard door**

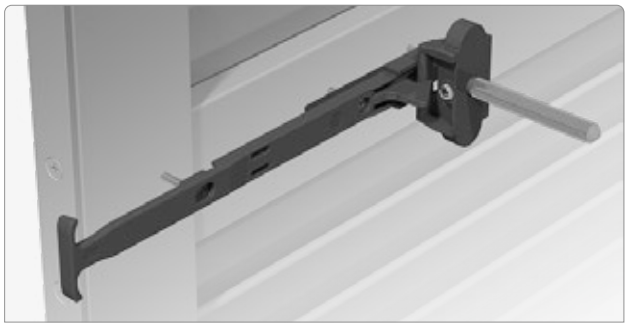

| X |
|---|
| 35 |

## Retention elements

### Snap holder

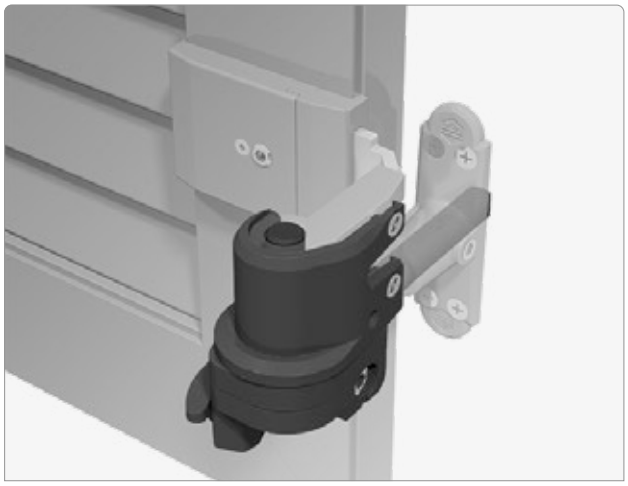

| X |
|---|
| 25 |

**Restriction:**
- max. 1.2 $m^2$
- max. 60 km/h

**of limited usage!**

## Lockers

### Espagnolette round

### Rod lock 2F

### Snap lock

### Shutter middle lock

## Lockers

### Pull stays

### Shutter rake and venetian blind rod

# Annex

Definitions of dimensions 168

## Definitions of dimensions

Dimensions should always be viewed **from inside to outside**.

# Index

B

**Bands**

wing shutter conventional 156

C

**Clamp**

wing shutter conventional 154

**Convenience casement holder**

wing shutter conventional 162
wing shutter with installation frame 124
wing shutter with window frame 89

D

**Door casement holder**

wing shutter conventional 161
wing shutter with installation frame 124

E

**End stop diagrams**

pantograph shutter 58
sliding bi-fold shutter 71
sliding shutter 39
wing shutter conventional 150
wing shutter with installation frame 120
wing shutter with window frame 86

**Espagnolette round**

wing shutter conventional 164
wing shutter with window frame 91

F

**Frieze**

pantograph shutter 59
sliding bi-fold shutter 73
sliding shutter 40
wing shutter conventional 153
wing shutter with installation frame 122
wing shutter with window frame 88

G

**Guide rails**

pantograph shutter 57
sliding bi-fold shutter 70
sliding shutter 37

J

**Justierfix**

external wall installation 157

L

**Lady's head**

wing shutter conventional 160
wing shutter with installation frame 123
wing shutter with window frame 89

**Limit dimensions**

pantograph shutter 50
sliding bi-fold shutter 62
sliding shutter 6
wing shutter conventional 130
wing shutter with installation frame 94
wing shutter with window frame 78

**Lockers**

sliding shutter 44
wing shutter conventional 164
wing shutter with installation frame 126
wing shutter with window frame 91

**Long band** 159

O

**Overwinding protection, integrated**

sliding bi-fold shutter 74

P

**Pantograph shutter** 49

**Point guides**

sliding shutter 38

**Pre-drilled holes**

wing shutter with installation frame 102
wing shutter with window frame 83

**Pull latches**

sliding bi-fold shutter 73

**Pull stays**

wing shutter conventional 165

R

**Retention elements**

wing shutter conventional 160
wing shutter with installation frame 123
wing shutter with window frame 89

**Rod lock 2F**
wing shutter conventional 164
wing shutter with installation frame 126
wing shutter with window frame 91
**Runner rails**
pantograph shutter 57
sliding bi-fold shutter 70
sliding shutter 36

**S**

**Sash types**
pantograph shutter 50
sliding bi-fold shutter 62
sliding shutter 6
wing shutter conventional 137
wing shutter with installation frame 99
wing shutter with window frame 80
**Shutter middle lock**
wing shutter conventional 164
wing shutter with installation frame 126
**Shutter holder**
wing shutter conventional 160
wing shutter with installation frame 123
wing shutter with window frame 89
**Shutter holder, automatic**
wing shutter conventional 161
wing shutter with installation frame 124
**Shutter latch**
wing shutter conventional 160
wing shutter with installation frame 123
wing shutter with window frame 89
**Shutter latch Marseille**
wing shutter conventional 160
wing shutter with window frame 89
**Shutter rake and venetian blind rod**
wing shutter conventional 165
**Sliding bi-fold shutter** 61
**Sliding shutter** 5
**Snap holder**
wing shutter conventional 163
wing shutter with installation frame 125
**Snap lock**
wing shutter conventional 164
wing shutter with installation frame 126
wing shutter with window frame 91
**Stoppers**
sliding shutter 46
**Systemfix**
external wall installation 156
screen frame installation 157

**W**

**Wing shutter conventional** 126
**Wing shutter with installation frame** 93
**Wing shutter with window frame** 77

Inspired by the **Sun.**

**griessergroup.com**

Subject to change without prior notice 20220804/000